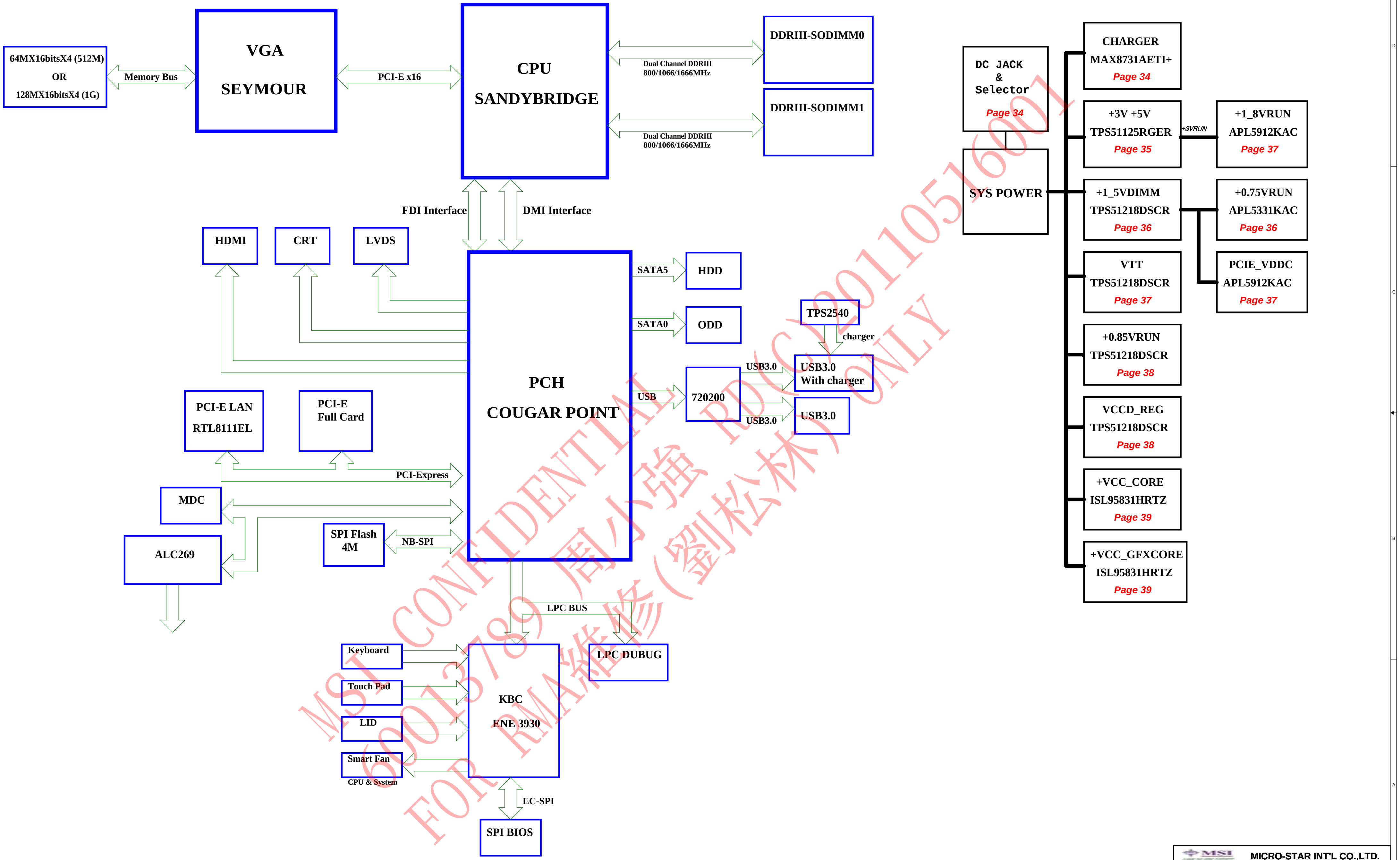
64MX16bitsX4 (512M)
OR
128MX16bitsX4 (1G)
Memory Bus
VGA
SEYMOUR
PCI-E x16
CPU
SANDYBRIDGE
Dual Channel DDRIII
800/1066/1666MHz
DDRIII-SODIMM0
Dual Channel DDRIII
800/1066/1666MHz
DDRIII-SODIMM1
FDI Interface
DMI Interface
HDMI
CRT
LVDS
PCH
COUGAR POINT
SATA5
HDD
SATA0
ODD
TPS2540
charger
USB
720200
USB3.0
USB3.0
With charger
USB3.0
USB3.0
PCI-E LAN
RTL8111EL
PCI-E
Full Card
PCI-Express
MDC
ALC269
SPI Flash
4M
NB-SPI
LPC BUS
LPC DUBUG
Keyboard
Touch Pad
LID
Smart Fan
CPU & System
KBC
ENE 3930
EC-SPI
SPI BIOS
DC JACK
&
Selector
Page 34
SYS POWER
CHARGER
MAX8731AETI+
Page 34
+3V +5V
TPS51125RGER
Page 35
+3VRUN
+1_8VRUN
APL5912KAC
Page 37
+1_5VDIMM
TPS51218DSCR
Page 36
+0.75VRUN
APL5331KAC
Page 36
VTT
TPS51218DSCR
Page 37
PCIE_VDDC
APL5912KAC
Page 37
+0.85VRUN
TPS51218DSCR
Page 38
VCCD_REG
TPS51218DSCR
Page 38
+VCC_CORE
ISL95831HRTZ
Page 39
+VCC_GFXCORE
ISL95831HRTZ
Page 39

MSI CONFIDENTIAL 周小强 RD(C)20110516001
600137789 FOR RMA維修(劉松林) ONLY

MICRO-STAR INT'L CO.,LTD.

Title BLCOK

Size A2 | Document Number MS-1482 | Rev 0A

Date: Wednesday, October 27, 2010 | Sheet 1 of 44

MSI CONFIDENTIAL
60013789 周小強 RD(C)20110516001
FOR RMA維修(劉松林) ONLY

MICRO-STAR INT'L CO.,LTD.

Title
STORY

Size A
Document Number **MS-1482**
Rev 0A

Date: Wednesday, October 27, 2010
Sheet 2 of 44

SANDYBRIDGE PROCESSOR (CLK,MISC,JTAG)

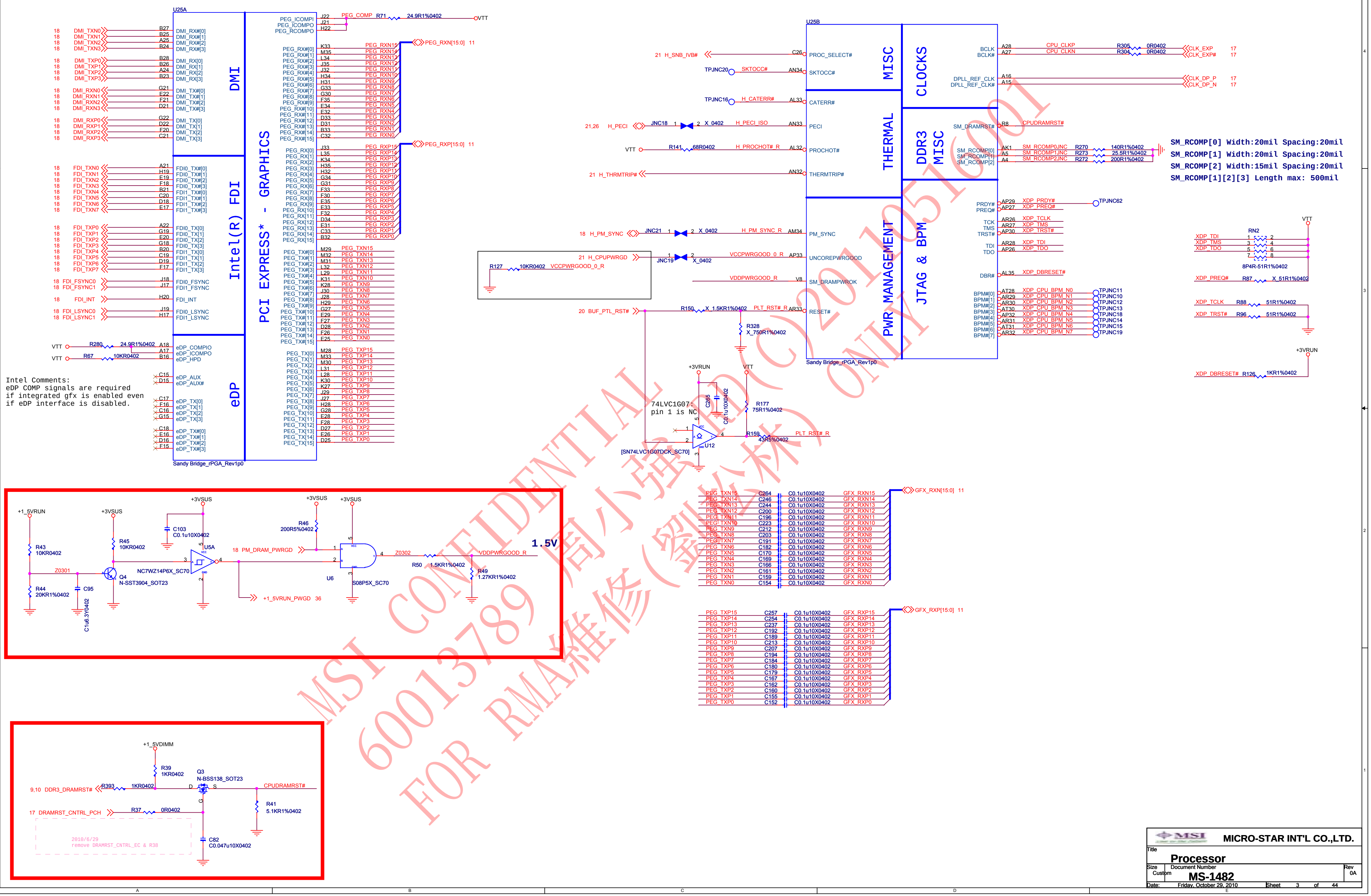

U25A
DMI
Intel(R) FDI
eDP
PCI EXPRESS* - GRAPHICS
DMI_TXN0
DMI_TXN1
DMI_TXN2
DMI_TXN3
DMI_TXP0
DMI_TXP1
DMI_TXP2
DMI_TXP3
DMI_RXN0
DMI_RXN1
DMI_RXN2
DMI_RXN3
DMI_RXP0
DMI_RXP1
DMI_RXP2
DMI_RXP3
FDI_TXN0
FDI_TXN7
FDI_TXP0
FDI_TXP7
FDI_FSYNC0
FDI_FSYNC1
FDI_INT
FDI_LSYNC0
FDI_LSYNC1
eDP_COMPIO
eDP_ICOMPO
eDP_HPD
eDP_AUX
eDP_AUX#
PEG_ICOMPI
PEG_ICOMPO
PEG_RCOMPO
PEG_COMP
R71
24.9R1%0402
VTT
PEG_RXN[15:0]
PEG_RXP[15:0]
R280
24.9R1%0402
R67
10KR0402
Sandy Bridge_rPGA_Rev1p0
U25B
MISC
CLOCKS
THERMAL
DDR3 MISC
PWR MANAGEMENT
JTAG & BPM
PROC_SELECT#
SKTOCC#
CATERR#
PECI
PROCHOT#
THERMTRIP#
PM_SYNC
UNCOREPWRGOOD
SM_DRAMPWROK
RESET#
BCLK
BCLK#
DPLL_REF_CLK
DPLL_REF_CLK#
SM_DRAMRST#
SM_RCOMP[0]
SM_RCOMP[1]
SM_RCOMP[2]
PRDY#
PREQ#
TCK
TMS
TRST#
TDI
TDO
DBR#
BPM#[0]
BPM#[7]
21 H_SNB_IVB#
TPJNC20
SKTOCC#
TPJNC16
H_CATERR#
21,26 H_PECI
JNC18
X_0402
H_PECI_ISO
R141
68R0402
H_PROCHOT#_R
21 H_THRMTRIP#
18 H_PM_SYNC
JNC21
H_PM_SYNC_R
21 H_CPUPWRGD
JNC19
VCCPWRGOOD_0_R
R127
10KR0402
VDDPWRGOOD_R
20 BUF_PTL_RST#
R150
X_1.5KR1%0402
PLT_RST#_R
R328
X_750R1%0402
CPU_CLKP
CPU_CLKN
R305
R304
0R0402
CLK_EXP
CLK_EXP#
CLK_DP_P
CLK_DP_N
CPUDRAMRST#
SM_RCOMP0JNC
SM_RCOMP1JNC
SM_RCOMP2JNC
R270
R273
R272
140R1%0402
25.5R1%0402
200R1%0402
XDP_PRDY#
XDP_PREQ#
TPJNC62
XDP_TCLK
XDP_TMS
XDP_TRST#
XDP_TDI
XDP_TDO
XDP_DBRESET#
XDP_CPU_BPM_N0
XDP_CPU_BPM_N7
TPJNC11
TPJNC10
TPJNC12
TPJNC13
TPJNC18
TPJNC14
TPJNC15
TPJNC19
SM_RCOMP[0] Width:20mil Spacing:20mil
SM_RCOMP[1] Width:20mil Spacing:20mil
SM_RCOMP[2] Width:15mil Spacing:20mil
SM_RCOMP[1][2][3] Length max: 500mil
RN2
8P4R-51R1%0402
R87
X_51R1%0402
R88
51R1%0402
R96
51R1%0402
+3VRUN
R126
1KR1%0402
74LVC1G07:
pin 1 is NC
C265
C0.1u10X0402
R177
75R1%0402
R159
43R5%0402
PLT_RST#_R
U12
[SN74LVC1G07DCK_SC70]
PEG_TXN[15:0]
GFX_RXN[15:0]
GFX_RXP[15:0]
C0.1u10X0402
+1_5VRUN
+3VSUS
R43
10KR0402
R44
20KR1%0402
C95
C1u6.3Y0402
Z0301
R45
10KR0402
Q4
N-SST3904_SOT23
C103
C0.1u10X0402
U5A
NC7WZ14P6X_SC70
18 PM_DRAM_PWRGD
+1_5VRUN_PWGD 36
R46
200R5%0402
U6
S08P5X_SC70
Z0302
R50
1.5KR1%0402
R49
1.27KR1%0402
VDDPWRGOOD_R
1.5V
+1_5VDIMM
R39
1KR0402
Q3
N-BSS138_SOT23
9,10 DDR3_DRAMRST#
R393
1KR0402
CPUDRAMRST#
R41
5.1KR1%0402
17 DRAMRST_CNTRL_PCH
R37
0R0402
C82
C0.047u10X0402
2010/6/29
remove DRAMRST_CNTRL_EC & R38

Intel Comments:
eDP COMP signals are required
if integrated gfx is enabled even
if eDP interface is disabled.

MSI CONFIDENTIAL 600013789 周小强 (C) 20110516001 FOR RMA維修(劉宏林) ONLY

MICRO-STAR INT'L CO.,LTD.

Title
Processor

Size	Document Number	Rev
Custom	MS-1482	0A

Date: Friday, October 29, 2010 Sheet 3 of 44

SANDYBRIDGE PROCESSOR (DDR3)

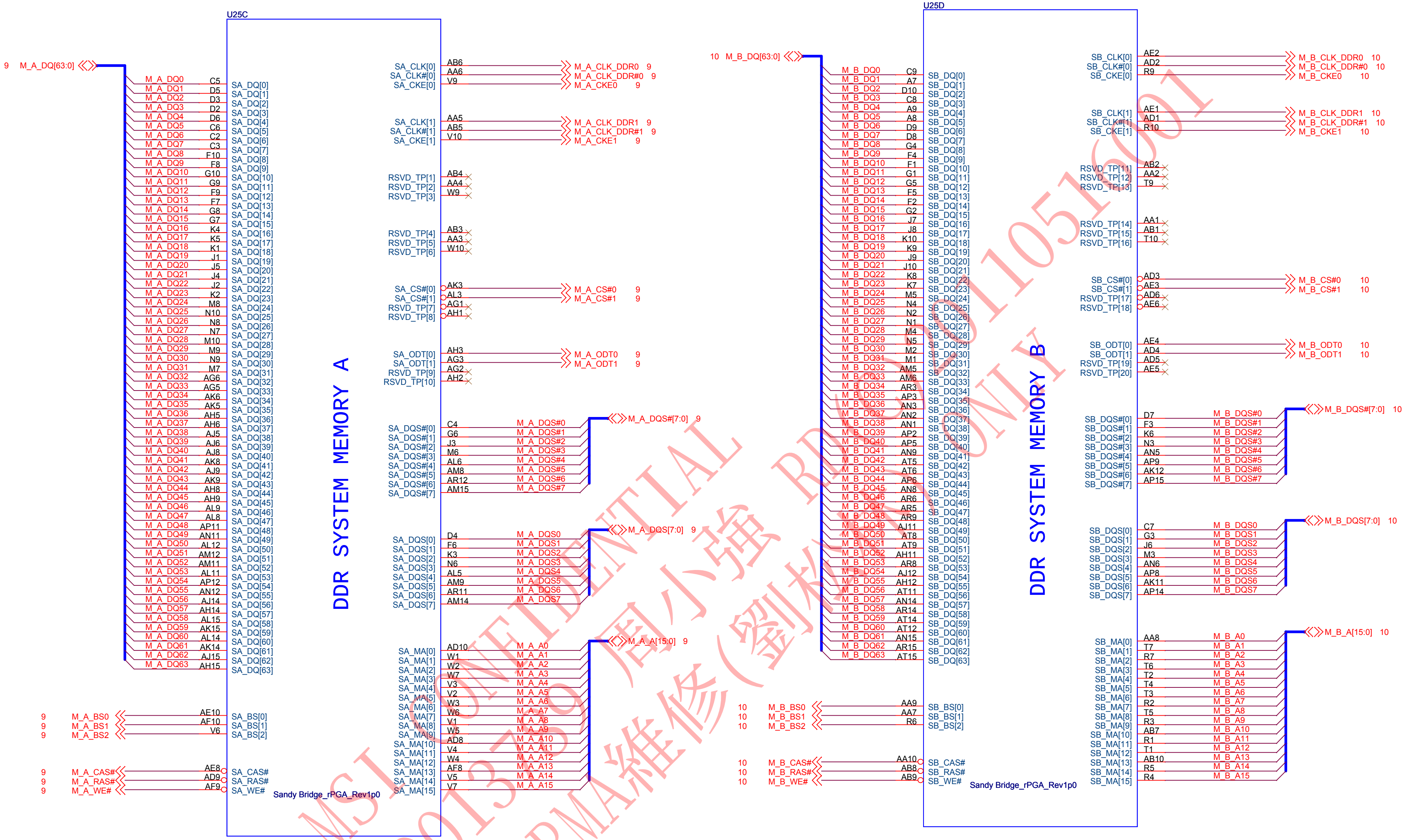

U25C
9 M_A_DQ[63:0]
M_A_DQ0 C5 SA_DQ[0]
M_A_DQ1 D5 SA_DQ[1]
M_A_DQ2 D3 SA_DQ[2]
M_A_DQ3 D2 SA_DQ[3]
M_A_DQ4 D6 SA_DQ[4]
M_A_DQ5 C6 SA_DQ[5]
M_A_DQ6 C2 SA_DQ[6]
M_A_DQ7 C3 SA_DQ[7]
M_A_DQ8 F10 SA_DQ[8]
M_A_DQ9 F8 SA_DQ[9]
M_A_DQ10 G10 SA_DQ[10]
M_A_DQ11 G9 SA_DQ[11]
M_A_DQ12 F9 SA_DQ[12]
M_A_DQ13 F7 SA_DQ[13]
M_A_DQ14 G8 SA_DQ[14]
M_A_DQ15 G7 SA_DQ[15]
M_A_DQ16 K4 SA_DQ[16]
M_A_DQ17 K5 SA_DQ[17]
M_A_DQ18 K1 SA_DQ[18]
M_A_DQ19 J1 SA_DQ[19]
M_A_DQ20 J5 SA_DQ[20]
M_A_DQ21 J4 SA_DQ[21]
M_A_DQ22 J2 SA_DQ[22]
M_A_DQ23 K2 SA_DQ[23]
M_A_DQ24 M8 SA_DQ[24]
M_A_DQ25 N10 SA_DQ[25]
M_A_DQ26 N8 SA_DQ[26]
M_A_DQ27 N7 SA_DQ[27]
M_A_DQ28 M10 SA_DQ[28]
M_A_DQ29 M9 SA_DQ[29]
M_A_DQ30 N9 SA_DQ[30]
M_A_DQ31 M7 SA_DQ[31]
M_A_DQ32 AG6 SA_DQ[32]
M_A_DQ33 AG5 SA_DQ[33]
M_A_DQ34 AK6 SA_DQ[34]
M_A_DQ35 AK5 SA_DQ[35]
M_A_DQ36 AH5 SA_DQ[36]
M_A_DQ37 AH6 SA_DQ[37]
M_A_DQ38 AJ5 SA_DQ[38]
M_A_DQ39 AJ6 SA_DQ[39]
M_A_DQ40 AJ8 SA_DQ[40]
M_A_DQ41 AK8 SA_DQ[41]
M_A_DQ42 AJ9 SA_DQ[42]
M_A_DQ43 AK9 SA_DQ[43]
M_A_DQ44 AH8 SA_DQ[44]
M_A_DQ45 AH9 SA_DQ[45]
M_A_DQ46 AL9 SA_DQ[46]
M_A_DQ47 AL8 SA_DQ[47]
M_A_DQ48 AP11 SA_DQ[48]
M_A_DQ49 AN11 SA_DQ[49]
M_A_DQ50 AL12 SA_DQ[50]
M_A_DQ51 AM12 SA_DQ[51]
M_A_DQ52 AM11 SA_DQ[52]
M_A_DQ53 AL11 SA_DQ[53]
M_A_DQ54 AP12 SA_DQ[54]
M_A_DQ55 AN12 SA_DQ[55]
M_A_DQ56 AJ14 SA_DQ[56]
M_A_DQ57 AH14 SA_DQ[57]
M_A_DQ58 AL15 SA_DQ[58]
M_A_DQ59 AK15 SA_DQ[59]
M_A_DQ60 AL14 SA_DQ[60]
M_A_DQ61 AK14 SA_DQ[61]
M_A_DQ62 AJ15 SA_DQ[62]
M_A_DQ63 AH15 SA_DQ[63]
9 M_A_BS0 AE10 SA_BS[0]
9 M_A_BS1 AF10 SA_BS[1]
9 M_A_BS2 V6 SA_BS[2]
9 M_A_CAS# AE8 SA_CAS#
9 M_A_RAS# AD9 SA_RAS#
9 M_A_WE# AF9 SA_WE#
Sandy Bridge_rPGA_Rev1p0
DDR SYSTEM MEMORY A
SA_CLK[0] AB6 M_A_CLK_DDR0 9
SA_CLK#[0] AA6 M_A_CLK_DDR#0 9
SA_CKE[0] V9 M_A_CKE0 9
SA_CLK[1] AA5 M_A_CLK_DDR1 9
SA_CLK#[1] AB5 M_A_CLK_DDR#1 9
SA_CKE[1] V10 M_A_CKE1 9
RSVD_TP[1] AB4
RSVD_TP[2] AA4
RSVD_TP[3] W9
RSVD_TP[4] AB3
RSVD_TP[5] AA3
RSVD_TP[6] W10
SA_CS#[0] AK3 M_A_CS#0 9
SA_CS#[1] AL3 M_A_CS#1 9
RSVD_TP[7] AG1
RSVD_TP[8] AH1
SA_ODT[0] AH3 M_A_ODT0 9
SA_ODT[1] AG3 M_A_ODT1 9
RSVD_TP[9] AG2
RSVD_TP[10] AH2
SA_DQS#[0] C4 M_A_DQS#0
SA_DQS#[1] G6 M_A_DQS#1
SA_DQS#[2] J3 M_A_DQS#2
SA_DQS#[3] M6 M_A_DQS#3
SA_DQS#[4] AL6 M_A_DQS#4
SA_DQS#[5] AM8 M_A_DQS#5
SA_DQS#[6] AR12 M_A_DQS#6
SA_DQS#[7] AM15 M_A_DQS#7
M_A_DQS#[7:0] 9
SA_DQS[0] D4 M_A_DQS0
SA_DQS[1] F6 M_A_DQS1
SA_DQS[2] K3 M_A_DQS2
SA_DQS[3] N6 M_A_DQS3
SA_DQS[4] AL5 M_A_DQS4
SA_DQS[5] AM9 M_A_DQS5
SA_DQS[6] AR11 M_A_DQS6
SA_DQS[7] AM14 M_A_DQS7
M_A_DQS[7:0] 9
SA_MA[0] AD10 M_A_A0
SA_MA[1] W1 M_A_A1
SA_MA[2] W2 M_A_A2
SA_MA[3] W7 M_A_A3
SA_MA[4] V3 M_A_A4
SA_MA[5] V2 M_A_A5
SA_MA[6] W3 M_A_A6
SA_MA[7] W6 M_A_A7
SA_MA[8] V1 M_A_A8
SA_MA[9] W5 M_A_A9
SA_MA[10] AD8 M_A_A10
SA_MA[11] V4 M_A_A11
SA_MA[12] W4 M_A_A12
SA_MA[13] AF8 M_A_A13
SA_MA[14] V5 M_A_A14
SA_MA[15] V7 M_A_A15
M_A_A[15:0] 9
U25D
10 M_B_DQ[63:0]
M_B_DQ0 C9 SB_DQ[0]
M_B_DQ1 A7 SB_DQ[1]
M_B_DQ2 D10 SB_DQ[2]
M_B_DQ3 C8 SB_DQ[3]
M_B_DQ4 A9 SB_DQ[4]
M_B_DQ5 A8 SB_DQ[5]
M_B_DQ6 D9 SB_DQ[6]
M_B_DQ7 D8 SB_DQ[7]
M_B_DQ8 G4 SB_DQ[8]
M_B_DQ9 F4 SB_DQ[9]
M_B_DQ10 F1 SB_DQ[10]
M_B_DQ11 G1 SB_DQ[11]
M_B_DQ12 G5 SB_DQ[12]
M_B_DQ13 F5 SB_DQ[13]
M_B_DQ14 F2 SB_DQ[14]
M_B_DQ15 G2 SB_DQ[15]
M_B_DQ16 J7 SB_DQ[16]
M_B_DQ17 J8 SB_DQ[17]
M_B_DQ18 K10 SB_DQ[18]
M_B_DQ19 K9 SB_DQ[19]
M_B_DQ20 J9 SB_DQ[20]
M_B_DQ21 J10 SB_DQ[21]
M_B_DQ22 K8 SB_DQ[22]
M_B_DQ23 K7 SB_DQ[23]
M_B_DQ24 M5 SB_DQ[24]
M_B_DQ25 N4 SB_DQ[25]
M_B_DQ26 N2 SB_DQ[26]
M_B_DQ27 N1 SB_DQ[27]
M_B_DQ28 M4 SB_DQ[28]
M_B_DQ29 N5 SB_DQ[29]
M_B_DQ30 M2 SB_DQ[30]
M_B_DQ31 M1 SB_DQ[31]
M_B_DQ32 AM5 SB_DQ[32]
M_B_DQ33 AM6 SB_DQ[33]
M_B_DQ34 AR3 SB_DQ[34]
M_B_DQ35 AP3 SB_DQ[35]
M_B_DQ36 AN3 SB_DQ[36]
M_B_DQ37 AN2 SB_DQ[37]
M_B_DQ38 AN1 SB_DQ[38]
M_B_DQ39 AP2 SB_DQ[39]
M_B_DQ40 AP5 SB_DQ[40]
M_B_DQ41 AN9 SB_DQ[41]
M_B_DQ42 AT5 SB_DQ[42]
M_B_DQ43 AT6 SB_DQ[43]
M_B_DQ44 AP6 SB_DQ[44]
M_B_DQ45 AN8 SB_DQ[45]
M_B_DQ46 AR6 SB_DQ[46]
M_B_DQ47 AR5 SB_DQ[47]
M_B_DQ48 AR9 SB_DQ[48]
M_B_DQ49 AJ11 SB_DQ[49]
M_B_DQ50 AT8 SB_DQ[50]
M_B_DQ51 AT9 SB_DQ[51]
M_B_DQ52 AH11 SB_DQ[52]
M_B_DQ53 AR8 SB_DQ[53]
M_B_DQ54 AJ12 SB_DQ[54]
M_B_DQ55 AH12 SB_DQ[55]
M_B_DQ56 AT11 SB_DQ[56]
M_B_DQ57 AN14 SB_DQ[57]
M_B_DQ58 AR14 SB_DQ[58]
M_B_DQ59 AT14 SB_DQ[59]
M_B_DQ60 AT12 SB_DQ[60]
M_B_DQ61 AN15 SB_DQ[61]
M_B_DQ62 AR15 SB_DQ[62]
M_B_DQ63 AT15 SB_DQ[63]
10 M_B_BS0 AA9 SB_BS[0]
10 M_B_BS1 AA7 SB_BS[1]
10 M_B_BS2 R6 SB_BS[2]
10 M_B_CAS# AA10 SB_CAS#
10 M_B_RAS# AB8 SB_RAS#
10 M_B_WE# AB9 SB_WE#
Sandy Bridge_rPGA_Rev1p0
DDR SYSTEM MEMORY B
SB_CLK[0] AE2 M_B_CLK_DDR0 10
SB_CLK#[0] AD2 M_B_CLK_DDR#0 10
SB_CKE[0] R9 M_B_CKE0 10
SB_CLK[1] AE1 M_B_CLK_DDR1 10
SB_CLK#[1] AD1 M_B_CLK_DDR#1 10
SB_CKE[1] R10 M_B_CKE1 10
RSVD_TP[11] AB2
RSVD_TP[12] AA2
RSVD_TP[13] T9
RSVD_TP[14] AA1
RSVD_TP[15] AB1
RSVD_TP[16] T10
SB_CS#[0] AD3 M_B_CS#0 10
SB_CS#[1] AE3 M_B_CS#1 10
RSVD_TP[17] AD6
RSVD_TP[18] AE6
SB_ODT[0] AE4 M_B_ODT0 10
SB_ODT[1] AD4 M_B_ODT1 10
RSVD_TP[19] AD5
RSVD_TP[20] AE5
SB_DQS#[0] D7 M_B_DQS#0
SB_DQS#[1] F3 M_B_DQS#1
SB_DQS#[2] K6 M_B_DQS#2
SB_DQS#[3] N3 M_B_DQS#3
SB_DQS#[4] AN5 M_B_DQS#4
SB_DQS#[5] AP9 M_B_DQS#5
SB_DQS#[6] AK12 M_B_DQS#6
SB_DQS#[7] AP15 M_B_DQS#7
M_B_DQS#[7:0] 10
SB_DQS[0] C7 M_B_DQS0
SB_DQS[1] G3 M_B_DQS1
SB_DQS[2] J6 M_B_DQS2
SB_DQS[3] M3 M_B_DQS3
SB_DQS[4] AN6 M_B_DQS4
SB_DQS[5] AP8 M_B_DQS5
SB_DQS[6] AK11 M_B_DQS6
SB_DQS[7] AP14 M_B_DQS7
M_B_DQS[7:0] 10
SB_MA[0] AA8 M_B_A0
SB_MA[1] T7 M_B_A1
SB_MA[2] R7 M_B_A2
SB_MA[3] T6 M_B_A3
SB_MA[4] T2 M_B_A4
SB_MA[5] T4 M_B_A5
SB_MA[6] T3 M_B_A6
SB_MA[7] R2 M_B_A7
SB_MA[8] T5 M_B_A8
SB_MA[9] R3 M_B_A9
SB_MA[10] AB7 M_B_A10
SB_MA[11] R1 M_B_A11
SB_MA[12] T1 M_B_A12
SB_MA[13] AB10 M_B_A13
SB_MA[14] R5 M_B_A14
SB_MA[15] R4 M_B_A15
M_B_A[15:0] 10

MSI CONFIDENTIAL
600135759 周小強 RD 20110516001
FOR RMA維修(劉松[illegible]) ONLY

MICRO-STAR INT'L CO.,LTD.

Title
Memory
Size Custom
Document Number **MS-1482**
Rev 0A
Date: Friday, October 29, 2010
Sheet 4 of 44

SANDYBRIDGE PROCESSOR (POWER)

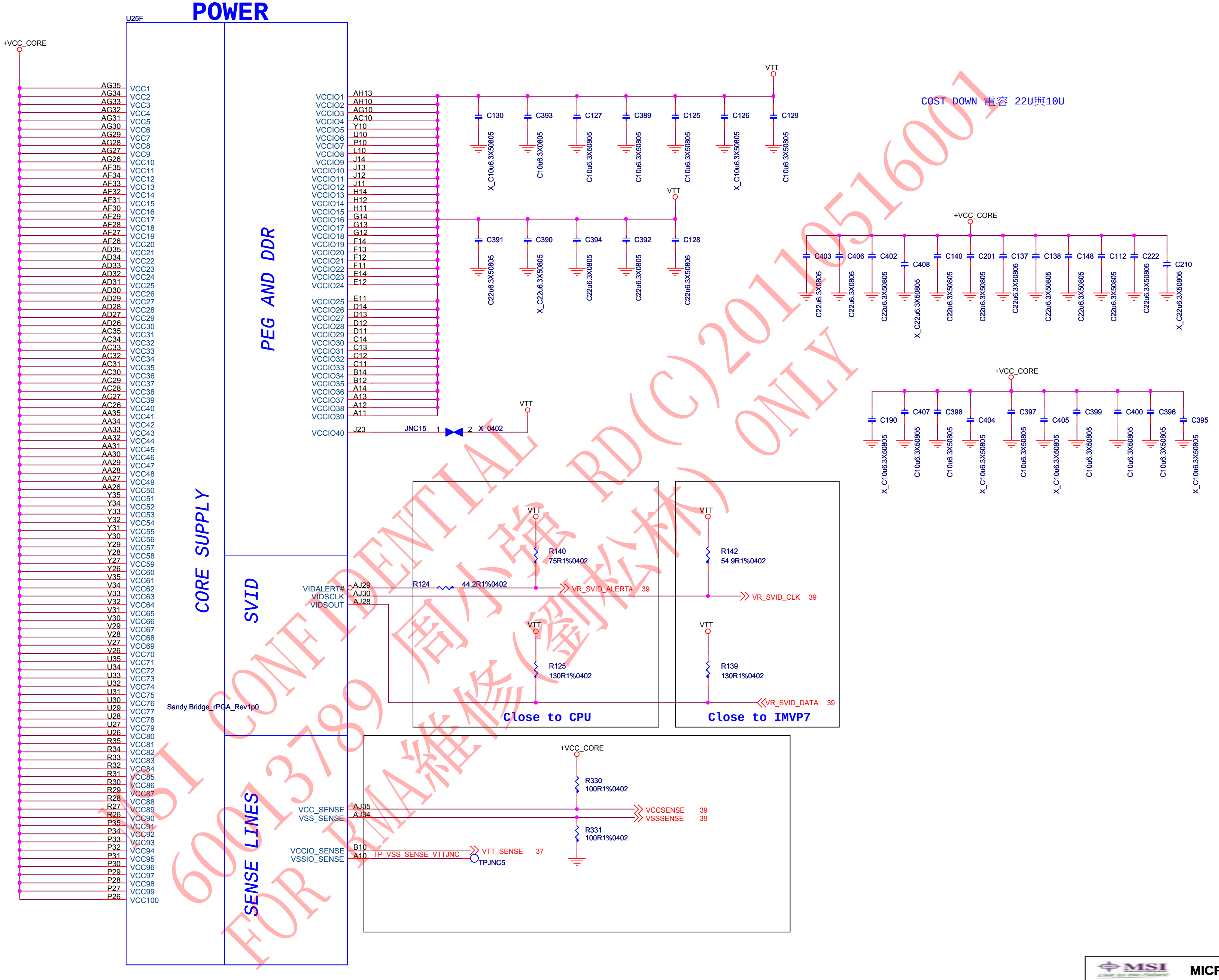
POWER
U25F
+VCC_CORE
AG35 VCC1
AG34 VCC2
AG33 VCC3
AG32 VCC4
AG31 VCC5
AG30 VCC6
AG29 VCC7
AG28 VCC8
AG27 VCC9
AG26 VCC10
AF35 VCC11
AF34 VCC12
AF33 VCC13
AF32 VCC14
AF31 VCC15
AF30 VCC16
AF29 VCC17
AF28 VCC18
AF27 VCC19
AF26 VCC20
AD35 VCC21
AD34 VCC22
AD33 VCC23
AD32 VCC24
AD31 VCC25
AD30 VCC26
AD29 VCC27
AD28 VCC28
AD27 VCC29
AD26 VCC30
AC35 VCC31
AC34 VCC32
AC33 VCC33
AC32 VCC34
AC31 VCC35
AC30 VCC36
AC29 VCC37
AC28 VCC38
AC27 VCC39
AC26 VCC40
AA35 VCC41
AA34 VCC42
AA33 VCC43
AA32 VCC44
AA31 VCC45
AA30 VCC46
AA29 VCC47
AA28 VCC48
AA27 VCC49
AA26 VCC50
Y35 VCC51
Y34 VCC52
Y33 VCC53
Y32 VCC54
Y31 VCC55
Y30 VCC56
Y29 VCC57
Y28 VCC58
Y27 VCC59
Y26 VCC60
V35 VCC61
V34 VCC62
V33 VCC63
V32 VCC64
V31 VCC65
V30 VCC66
V29 VCC67
V28 VCC68
V27 VCC69
V26 VCC70
U35 VCC71
U34 VCC72
U33 VCC73
U32 VCC74
U31 VCC75
U30 VCC76
U29 VCC77
U28 VCC78
U27 VCC79
U26 VCC80
R35 VCC81
R34 VCC82
R33 VCC83
R32 VCC84
R31 VCC85
R30 VCC86
R29 VCC87
R28 VCC88
R27 VCC89
R26 VCC90
P35 VCC91
P34 VCC92
P33 VCC93
P32 VCC94
P31 VCC95
P30 VCC96
P29 VCC97
P28 VCC98
P27 VCC99
P26 VCC100
CORE SUPPLY
Sandy Bridge_rPGA_Rev1p0
PEG AND DDR
VCCIO1 AH13
VCCIO2 AH10
VCCIO3 AG10
VCCIO4 AC10
VCCIO5 Y10
VCCIO6 U10
VCCIO7 P10
VCCIO8 L10
VCCIO9 J14
VCCIO10 J13
VCCIO11 J12
VCCIO12 J11
VCCIO13 H14
VCCIO14 H12
VCCIO15 H11
VCCIO16 G14
VCCIO17 G13
VCCIO18 G12
VCCIO19 F14
VCCIO20 F13
VCCIO21 F12
VCCIO22 F11
VCCIO23 E14
VCCIO24 E12
VCCIO25 E11
VCCIO26 D14
VCCIO27 D13
VCCIO28 D12
VCCIO29 D11
VCCIO30 C14
VCCIO31 C13
VCCIO32 C12
VCCIO33 C11
VCCIO34 B14
VCCIO35 B12
VCCIO36 A14
VCCIO37 A13
VCCIO38 A12
VCCIO39 A11
VCCIO40 J23
JNC15 1 2 X_0402
VTT
C130 X_C10u6.3X50805
C393 C10u6.3X0805
C127 C10u6.3X50805
C389 C10u6.3X50805
C125 C10u6.3X50805
C126 X_C10u6.3X50805
C129 C10u6.3X50805
VTT
C391 C22u6.3X50805
C390 X_C22u6.3X50805
C394 C22u6.3X0805
C392 C22u6.3X0805
C128 C22u6.3X50805
COST DOWN 電容 22U與10U
+VCC_CORE
C403 C22u6.3X0805
C406 C22u6.3X0805
C402 C22u6.3X50805
C408 X_C22u6.3X50805
C140 C22u6.3X50805
C201 C22u6.3X50805
C137 C22u6.3X50805
C138 C22u6.3X50805
C148 C22u6.3X50805
C112 C22u6.3X50805
C222 C22u6.3X50805
C210 X_C22u6.3X50805
+VCC_CORE
C190 X_C10u6.3X50805
C407 C10u6.3X50805
C398 C10u6.3X50805
C404 X_C10u6.3X50805
C397 C10u6.3X50805
C405 X_C10u6.3X50805
C399 C10u6.3X50805
C400 C10u6.3X50805
C396 C10u6.3X50805
C395 X_C10u6.3X50805
SVID
VIDALERT# AJ29
VIDSCLK AJ30
VIDSOUT AJ28
R124 44.2R1%0402
VTT
R140 75R1%0402
VR_SVID_ALERT# 39
VTT
R125 130R1%0402
Close to CPU
VTT
R142 54.9R1%0402
VR_SVID_CLK 39
VTT
R139 130R1%0402
VR_SVID_DATA 39
Close to IMVP7
SENSE LINES
VCC_SENSE AJ35
VSS_SENSE AJ34
VCCIO_SENSE B10
VSSIO_SENSE A10
+VCC_CORE
R330 100R1%0402
VCCSENSE 39
VSSSENSE 39
R331 100R1%0402
VTT_SENSE 37
TP_VSS_SENSE_VTTJNC
TPJNC5

MSI CONFIDENTIAL RD(C)20110516001 ONLY
60013789 周小强 (劉松林)
FOR RMA維修

MICRO-STAR INT'L CO.,LTD.
Title
Processor power
Size Custom
Document Number MS-1482
Rev 0A
Date: Friday, October 29, 2010
Sheet 5 of 44

SANDYBRIDGE PROCESSOR (GRAPHICS POWER)

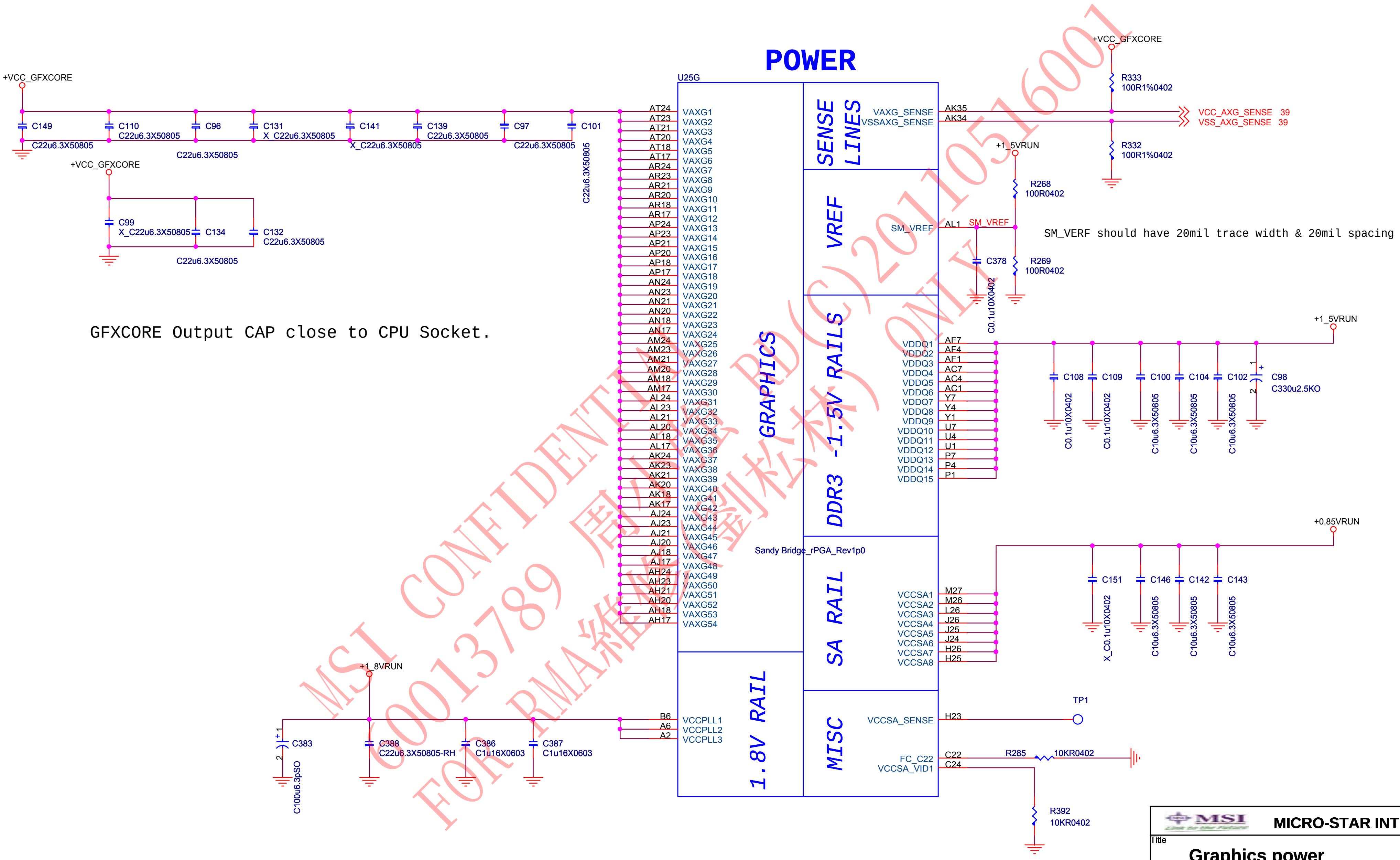
POWER
U25G
GRAPHICS
SENSE LINES
VREF
DDR3 -1.5V RAILS
SA RAIL
1.8V RAIL
MISC
Sandy Bridge_rPGA_Rev1p0
+VCC_GFXCORE
C149 C22u6.3X50805
C110 C22u6.3X50805
C96 C22u6.3X50805
C131 X_C22u6.3X50805
C141 X_C22u6.3X50805
C139 C22u6.3X50805
C97 C22u6.3X50805
C101 C22u6.3X50805
C99 X_C22u6.3X50805
C134 C22u6.3X50805
C132 C22u6.3X50805
AT24 VAXG1
AT23 VAXG2
AT21 VAXG3
AT20 VAXG4
AT18 VAXG5
AT17 VAXG6
AR24 VAXG7
AR23 VAXG8
AR21 VAXG9
AR20 VAXG10
AR18 VAXG11
AR17 VAXG12
AP24 VAXG13
AP23 VAXG14
AP21 VAXG15
AP20 VAXG16
AP18 VAXG17
AP17 VAXG18
AN24 VAXG19
AN23 VAXG20
AN21 VAXG21
AN20 VAXG22
AN18 VAXG23
AN17 VAXG24
AM24 VAXG25
AM23 VAXG26
AM21 VAXG27
AM20 VAXG28
AM18 VAXG29
AM17 VAXG30
AL24 VAXG31
AL23 VAXG32
AL21 VAXG33
AL20 VAXG34
AL18 VAXG35
AL17 VAXG36
AK24 VAXG37
AK23 VAXG38
AK21 VAXG39
AK20 VAXG40
AK18 VAXG41
AK17 VAXG42
AJ24 VAXG43
AJ23 VAXG44
AJ21 VAXG45
AJ20 VAXG46
AJ18 VAXG47
AJ17 VAXG48
AH24 VAXG49
AH23 VAXG50
AH21 VAXG51
AH20 VAXG52
AH18 VAXG53
AH17 VAXG54
VAXG_SENSE AK35
VSSAXG_SENSE AK34
+VCC_GFXCORE
R333 100R1%0402
R332 100R1%0402
VCC_AXG_SENSE 39
VSS_AXG_SENSE 39
+1_5VRUN
R268 100R0402
SM_VREF AL1 SM_VREF
C378 C0.1u10X0402
R269 100R0402
VDDQ1 AF7
VDDQ2 AF4
VDDQ3 AF1
VDDQ4 AC7
VDDQ5 AC4
VDDQ6 AC1
VDDQ7 Y7
VDDQ8 Y4
VDDQ9 Y1
VDDQ10 U7
VDDQ11 U4
VDDQ12 U1
VDDQ13 P7
VDDQ14 P4
VDDQ15 P1
+1_5VRUN
C108 C0.1u10X0402
C109 C0.1u10X0402
C100 C10u6.3X50805
C104 C10u6.3X50805
C102 C10u6.3X50805
C98 C330u2.5KO
+0.85VRUN
VCCSA1 M27
VCCSA2 M26
VCCSA3 L26
VCCSA4 J26
VCCSA5 J25
VCCSA6 J24
VCCSA7 H26
VCCSA8 H25
C151 X_C0.1u10X0402
C146 C10u6.3X50805
C142 C10u6.3X50805
C143 C10u6.3X50805
+1_8VRUN
B6 VCCPLL1
A6 VCCPLL2
A2 VCCPLL3
C383 C100u6.3pSO
C388 C22u6.3X50805-RH
C386 C1u16X0603
C387 C1u16X0603
VCCSA_SENSE H23
TP1
FC_C22 C22
VCCSA_VID1 C24
R285 10KR0402
R392 10KR0402

GFXCORE Output CAP close to CPU Socket.

SM_VERF should have 20mil trace width & 20mil spacing

MSI CONFIDENTIAL 周小明 RD(C)201105160001
00013789 周小明 RD(C)201105160001 ONLY
FOR RMA維修培訓教材

MSI
MICRO-STAR INT'L CO.,LTD.

Title
Graphics power

Size	Document Number	Rev
Custom	MS-1482	0A

Date: Friday, October 29, 2010 Sheet 6 of 44

SANDYBRIDGE PROCESSOR (GND)

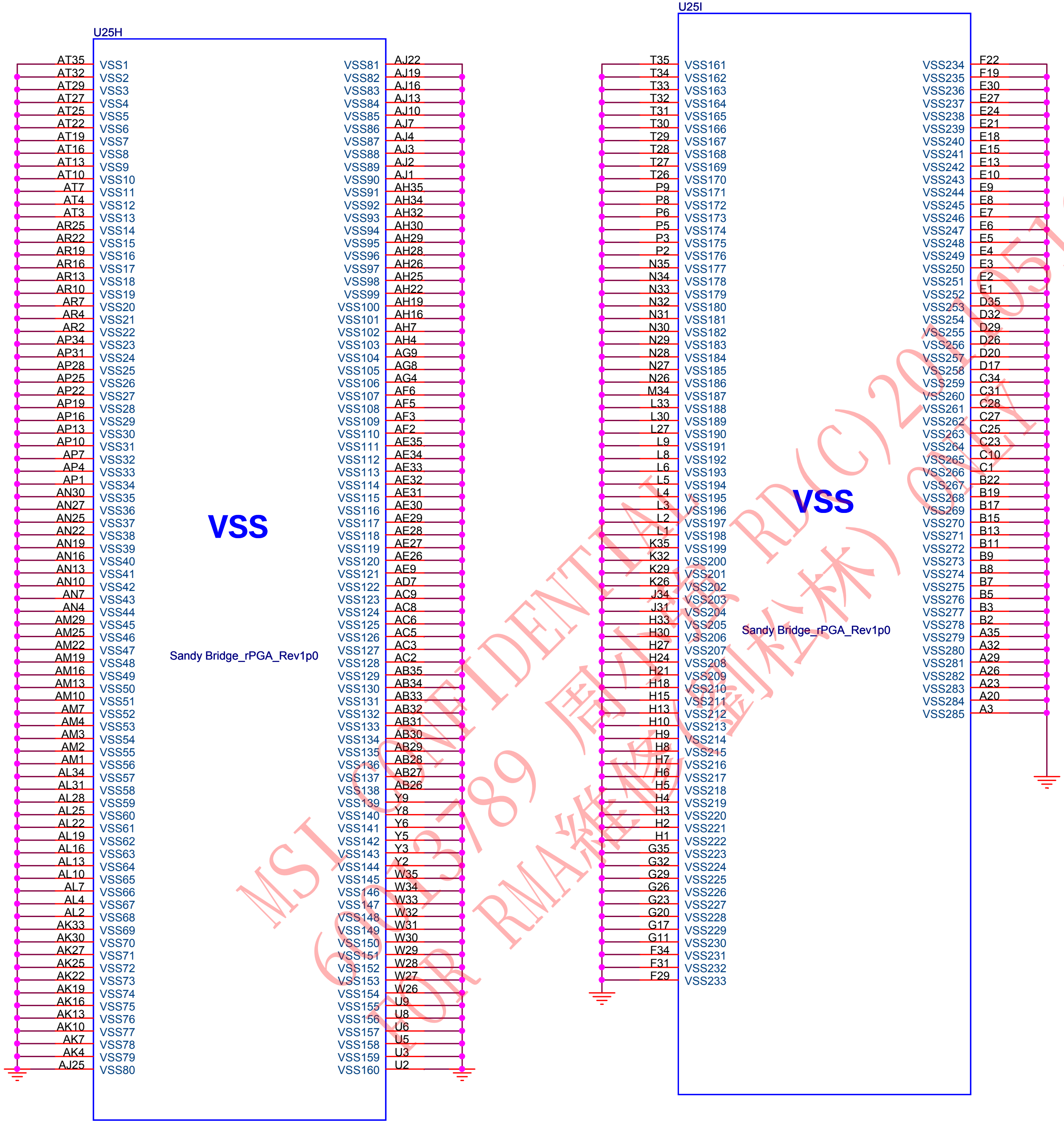
U25H
VSS
Sandy Bridge_rPGA_Rev1p0
AT35 VSS1
AT32 VSS2
AT29 VSS3
AT27 VSS4
AT25 VSS5
AT22 VSS6
AT19 VSS7
AT16 VSS8
AT13 VSS9
AT10 VSS10
AT7 VSS11
AT4 VSS12
AT3 VSS13
AR25 VSS14
AR22 VSS15
AR19 VSS16
AR16 VSS17
AR13 VSS18
AR10 VSS19
AR7 VSS20
AR4 VSS21
AR2 VSS22
AP34 VSS23
AP31 VSS24
AP28 VSS25
AP25 VSS26
AP22 VSS27
AP19 VSS28
AP16 VSS29
AP13 VSS30
AP10 VSS31
AP7 VSS32
AP4 VSS33
AP1 VSS34
AN30 VSS35
AN27 VSS36
AN25 VSS37
AN22 VSS38
AN19 VSS39
AN16 VSS40
AN13 VSS41
AN10 VSS42
AN7 VSS43
AN4 VSS44
AM29 VSS45
AM25 VSS46
AM22 VSS47
AM19 VSS48
AM16 VSS49
AM13 VSS50
AM10 VSS51
AM7 VSS52
AM4 VSS53
AM3 VSS54
AM2 VSS55
AM1 VSS56
AL34 VSS57
AL31 VSS58
AL28 VSS59
AL25 VSS60
AL22 VSS61
AL19 VSS62
AL16 VSS63
AL13 VSS64
AL10 VSS65
AL7 VSS66
AL4 VSS67
AL2 VSS68
AK33 VSS69
AK30 VSS70
AK27 VSS71
AK25 VSS72
AK22 VSS73
AK19 VSS74
AK16 VSS75
AK13 VSS76
AK10 VSS77
AK7 VSS78
AK4 VSS79
AJ25 VSS80
VSS81 AJ22
VSS82 AJ19
VSS83 AJ16
VSS84 AJ13
VSS85 AJ10
VSS86 AJ7
VSS87 AJ4
VSS88 AJ3
VSS89 AJ2
VSS90 AJ1
VSS91 AH35
VSS92 AH34
VSS93 AH32
VSS94 AH30
VSS95 AH29
VSS96 AH28
VSS97 AH26
VSS98 AH25
VSS99 AH22
VSS100 AH19
VSS101 AH16
VSS102 AH7
VSS103 AH4
VSS104 AG9
VSS105 AG8
VSS106 AG4
VSS107 AF6
VSS108 AF5
VSS109 AF3
VSS110 AF2
VSS111 AE35
VSS112 AE34
VSS113 AE33
VSS114 AE32
VSS115 AE31
VSS116 AE30
VSS117 AE29
VSS118 AE28
VSS119 AE27
VSS120 AE26
VSS121 AE9
VSS122 AD7
VSS123 AC9
VSS124 AC8
VSS125 AC6
VSS126 AC5
VSS127 AC3
VSS128 AC2
VSS129 AB35
VSS130 AB34
VSS131 AB33
VSS132 AB32
VSS133 AB31
VSS134 AB30
VSS135 AB29
VSS136 AB28
VSS137 AB27
VSS138 AB26
VSS139 Y9
VSS140 Y8
VSS141 Y6
VSS142 Y5
VSS143 Y3
VSS144 Y2
VSS145 W35
VSS146 W34
VSS147 W33
VSS148 W32
VSS149 W31
VSS150 W30
VSS151 W29
VSS152 W28
VSS153 W27
VSS154 W26
VSS155 U9
VSS156 U8
VSS157 U6
VSS158 U5
VSS159 U3
VSS160 U2
U25I
VSS
Sandy Bridge_rPGA_Rev1p0
T35 VSS161
T34 VSS162
T33 VSS163
T32 VSS164
T31 VSS165
T30 VSS166
T29 VSS167
T28 VSS168
T27 VSS169
T26 VSS170
P9 VSS171
P8 VSS172
P6 VSS173
P5 VSS174
P3 VSS175
P2 VSS176
N35 VSS177
N34 VSS178
N33 VSS179
N32 VSS180
N31 VSS181
N30 VSS182
N29 VSS183
N28 VSS184
N27 VSS185
N26 VSS186
M34 VSS187
L33 VSS188
L30 VSS189
L27 VSS190
L9 VSS191
L8 VSS192
L6 VSS193
L5 VSS194
L4 VSS195
L3 VSS196
L2 VSS197
L1 VSS198
K35 VSS199
K32 VSS200
K29 VSS201
K26 VSS202
J34 VSS203
J31 VSS204
H33 VSS205
H30 VSS206
H27 VSS207
H24 VSS208
H21 VSS209
H18 VSS210
H15 VSS211
H13 VSS212
H10 VSS213
H9 VSS214
H8 VSS215
H7 VSS216
H6 VSS217
H5 VSS218
H4 VSS219
H3 VSS220
H2 VSS221
H1 VSS222
G35 VSS223
G32 VSS224
G29 VSS225
G26 VSS226
G23 VSS227
G20 VSS228
G17 VSS229
G11 VSS230
F34 VSS231
F31 VSS232
F29 VSS233
VSS234 F22
VSS235 F19
VSS236 E30
VSS237 E27
VSS238 E24
VSS239 E21
VSS240 E18
VSS241 E15
VSS242 E13
VSS243 E10
VSS244 E9
VSS245 E8
VSS246 E7
VSS247 E6
VSS248 E5
VSS249 E4
VSS250 E3
VSS251 E2
VSS252 E1
VSS253 D35
VSS254 D32
VSS255 D29
VSS256 D26
VSS257 D20
VSS258 D17
VSS259 C34
VSS260 C31
VSS261 C28
VSS262 C27
VSS263 C25
VSS264 C23
VSS265 C10
VSS266 C1
VSS267 B22
VSS268 B19
VSS269 B17
VSS270 B15
VSS271 B13
VSS272 B11
VSS273 B9
VSS274 B8
VSS275 B7
VSS276 B5
VSS277 B3
VSS278 B2
VSS279 A35
VSS280 A32
VSS281 A29
VSS282 A26
VSS283 A23
VSS284 A20
VSS285 A3

MSI CONFIDENTIAL
66013789 周小[illegible] RD(C)20110516001
FOR RMA維修(劉松林) ONLY

MICRO-STAR INT'L CO.,LTD.

Title	GND	
Size Custom	Document Number MS-1482	Rev 0A
Date: Friday, October 29, 2010	Sheet 7 of 44	

SANDYBRIDGE PROCESSOR (RESERVED)

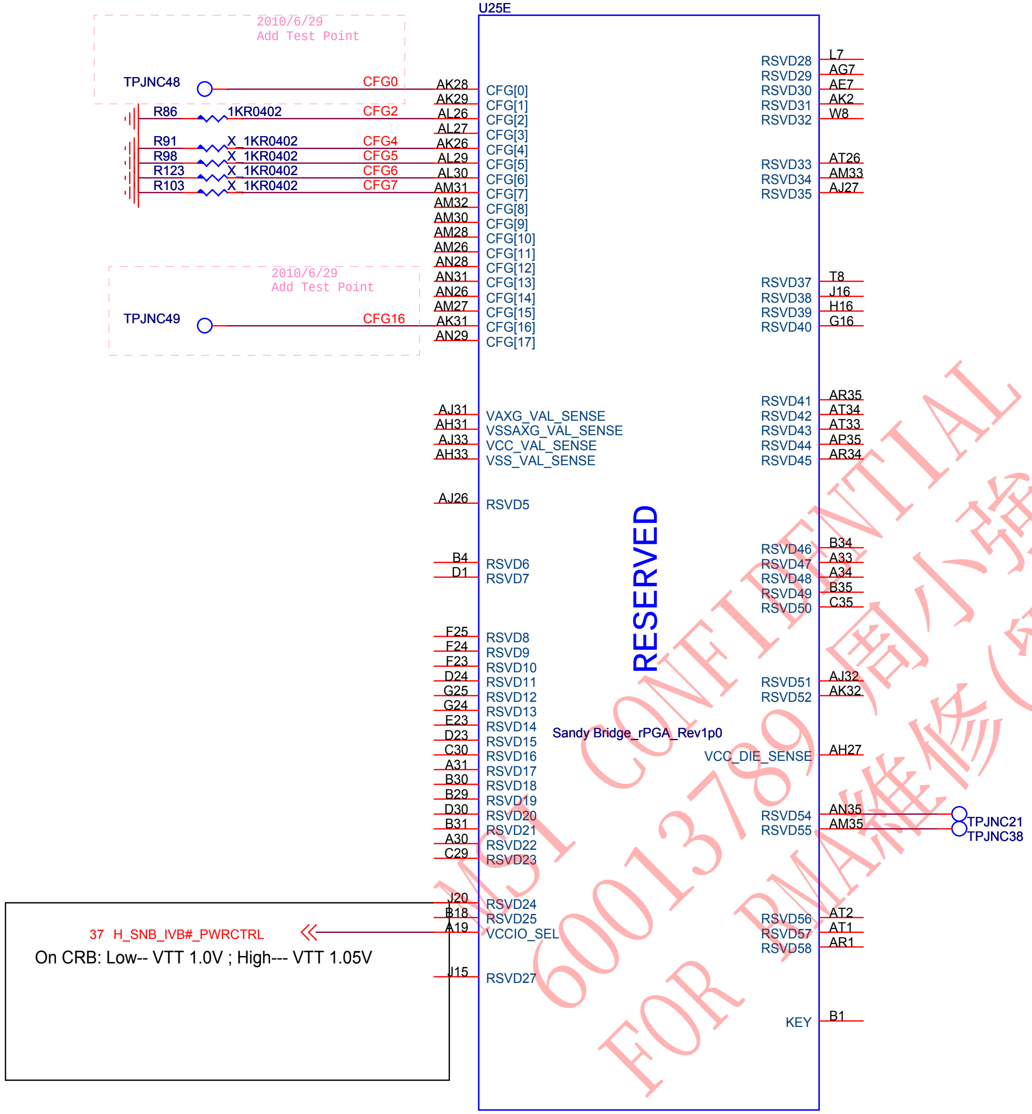
U25E
RESERVED
Sandy Bridge_rPGA_Rev1p0
2010/6/29
Add Test Point
TPJNC48
CFG0
R86 1KR0402 CFG2
R91 X_1KR0402 CFG4
R98 X_1KR0402 CFG5
R123 X_1KR0402 CFG6
R103 X_1KR0402 CFG7
2010/6/29
Add Test Point
TPJNC49
CFG16
AK28 CFG[0]
AK29 CFG[1]
AL26 CFG[2]
AL27 CFG[3]
AK26 CFG[4]
AL29 CFG[5]
AL30 CFG[6]
AM31 CFG[7]
AM32 CFG[8]
AM30 CFG[9]
AM28 CFG[10]
AM26 CFG[11]
AN28 CFG[12]
AN31 CFG[13]
AN26 CFG[14]
AM27 CFG[15]
AK31 CFG[16]
AN29 CFG[17]
AJ31 VAXG_VAL_SENSE
AH31 VSSAXG_VAL_SENSE
AJ33 VCC_VAL_SENSE
AH33 VSS_VAL_SENSE
AJ26 RSVD5
B4 RSVD6
D1 RSVD7
F25 RSVD8
F24 RSVD9
F23 RSVD10
D24 RSVD11
G25 RSVD12
G24 RSVD13
E23 RSVD14
D23 RSVD15
C30 RSVD16
A31 RSVD17
B30 RSVD18
B29 RSVD19
D30 RSVD20
B31 RSVD21
A30 RSVD22
C29 RSVD23
J20 RSVD24
B18 RSVD25
A19 VCCIO_SEL
J15 RSVD27
37 H_SNB_IVB#_PWRCTRL
RSVD28 L7
RSVD29 AG7
RSVD30 AE7
RSVD31 AK2
RSVD32 W8
RSVD33 AT26
RSVD34 AM33
RSVD35 AJ27
RSVD37 T8
RSVD38 J16
RSVD39 H16
RSVD40 G16
RSVD41 AR35
RSVD42 AT34
RSVD43 AT33
RSVD44 AP35
RSVD45 AR34
RSVD46 B34
RSVD47 A33
RSVD48 A34
RSVD49 B35
RSVD50 C35
RSVD51 AJ32
RSVD52 AK32
VCC_DIE_SENSE AH27
RSVD54 AN35 TPJNC21
RSVD55 AM35 TPJNC38
RSVD56 AT2
RSVD57 AT1
RSVD58 AR1
KEY B1

On CRB: Low-- VTT 1.0V ; High--- VTT 1.05V

CFG3 - PCI-Express Static Lane Reversal

CFG2	1 :Normal Operation 0 :Lane Numbers Reversed 15 -> 0, 14 -> 1, ...

CFG4 - Display Port Presence

CFG4	1:Disabled; No Physical Display Port attached to Embedded Display Port 0:Enabled; An external Display Port device is connected to the Embedded Display Port

PCI-Express Configuration Select

CFG[5:6]	11:Default X16-device 1 functions 1 and 2 disabled 10: X8 X8-device 1 functions 1 enable, function2 disabled 01:Reserved--(device 1 functions 1disabled function2 enable 00: X8 X4 X4-device 1 functions 1 and 2 enable

PEG DEFER TRAINING

CFG7	1 :(Default)PEG train immediately following xxRESETB de assertion 0 :PEG wait for BIOS for training

MSI CONFIDENTIAL 60013789 周小強 FOR RMA維修(劉松林) RD(C)20110516001 ONLY

MICRO-STAR INT'L CO.,LTD.

Title	CFG RSVD	
Size Custom	Document Number MS-1482	Rev 0A
Date: Friday, October 29, 2010	Sheet 8 of 44	

SODIMM#A

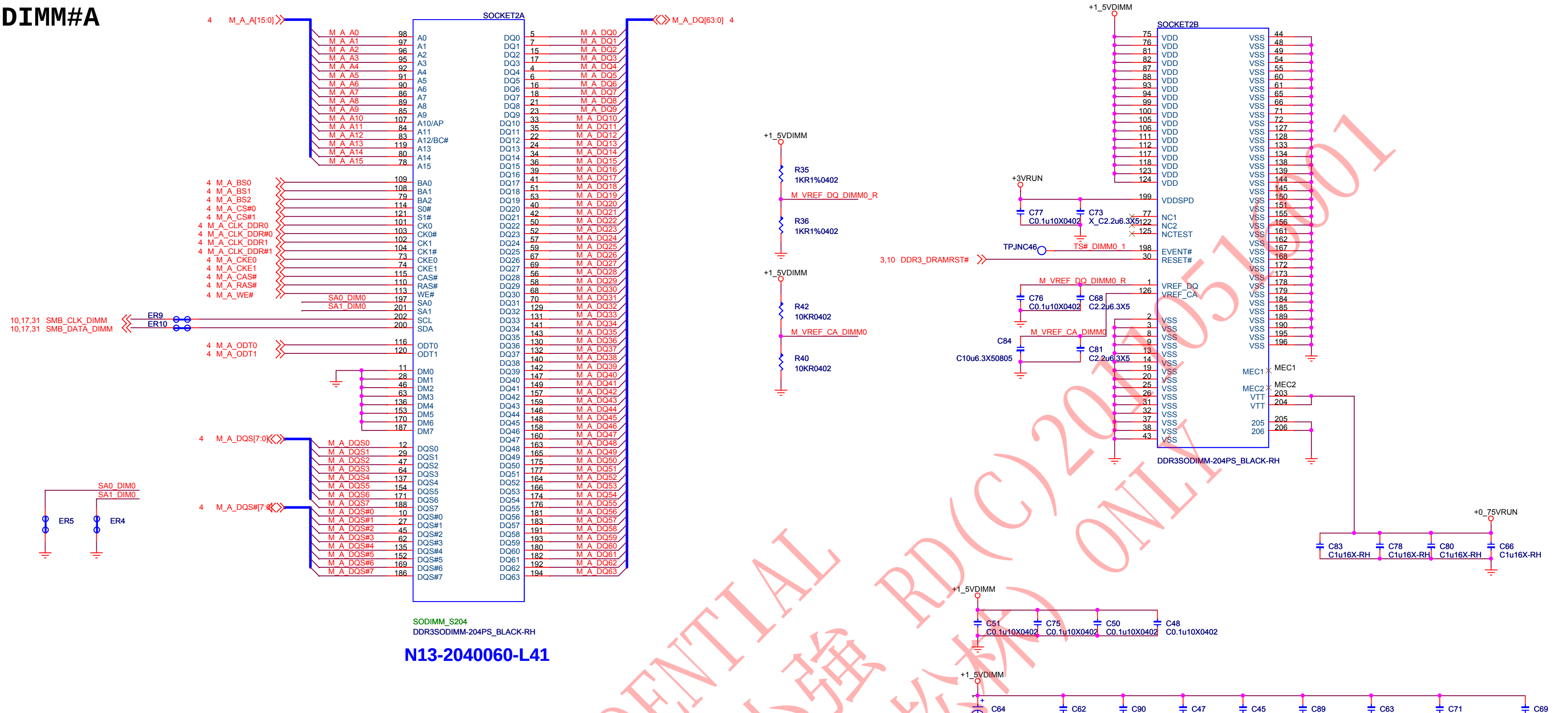
SOCKET2A
M_A_A[15:0]
M_A_DQ[63:0]
M_A_BS0
M_A_BS1
M_A_BS2
M_A_CS#0
M_A_CS#1
M_A_CLK_DDR0
M_A_CLK_DDR#0
M_A_CLK_DDR1
M_A_CLK_DDR#1
M_A_CKE0
M_A_CKE1
M_A_CAS#
M_A_RAS#
M_A_WE#
SA0_DIM0
SA1_DIM0
10,17,31 SMB_CLK_DIMM
10,17,31 SMB_DATA_DIMM
ER9
ER10
M_A_ODT0
M_A_ODT1
M_A_DQS[7:0]
M_A_DQS#[7:0]
ER5
ER4
SODIMM_S204
DDR3SODIMM-204PS_BLACK-RH
N13-2040060-L41
+1_5VDIMM
R35
1KR1%0402
M_VREF_DQ_DIMM0_R
R36
1KR1%0402
R42
10KR0402
M_VREF_CA_DIMM0
R40
10KR0402
SOCKET2B
+3VRUN
C77
C0.1u10X0402
C73
X_C2.2u6.3X5
TPJNC46
TS#_DIMM0_1
3,10 DDR3_DRAMRST#
C76
C0.1u10X0402
C68
C2.2u6.3X5
C84
C10u6.3X50805
C81
C2.2u6.3X5
VDD
VDDSPD
NC1
NC2
NCTEST
EVENT#
RESET#
VREF_DQ
VREF_CA
VSS
VTT
MEC1
MEC2
DDR3SODIMM-204PS_BLACK-RH
+0_75VRUN
C83
C1u16X-RH
C78
C1u16X-RH
C80
C1u16X-RH
C66
C1u16X-RH
C51
C0.1u10X0402
C75
C0.1u10X0402
C50
C0.1u10X0402
C48
C0.1u10X0402
C64
X_C330u2.5pSO-1
C62
C10u6.3X50805
C90
C10u6.3X50805
C47
C10u6.3X50805
C45
C10u6.3X50805
C89
C10u6.3X50805
C63
X_C10u6.3X50805
C71
X_C10u6.3X50805
C69
X_C10u6.3X50805

DDR3 SDRAM,2GB,667(1333)MHz,TRANSCEND/TS256MSK64V3U

2.5.4 DDR3 VREFDQ Design Implementation

Intel is requesting that customers implement two methods (M1 and M3) to generate and control the DDR3 SO-DIMM Reference voltage for Data/Strobe inputs (V_{REFDQ}) on Arrandale- and Clarksfield-based platforms. For Arrandale, M1 should be used. For Clarksfield only designs and common motherboard designs (which support both Arrandale and Clarksfield processors), both M1 and M3 methods should be concurrently implemented.

Note: DDR3 V_{REFDQ} recommendation outlined above in this document, V_{REFCA} and V_{REFDQ} on SO-DIMM cannot be tied together any more for Clarksfield only and Common motherboard designs in order to support M3 and M1/M3 co-existence.

Figure 33. Clarksfield DDR3 SO-DIMM VREF_DQ Design Requirements

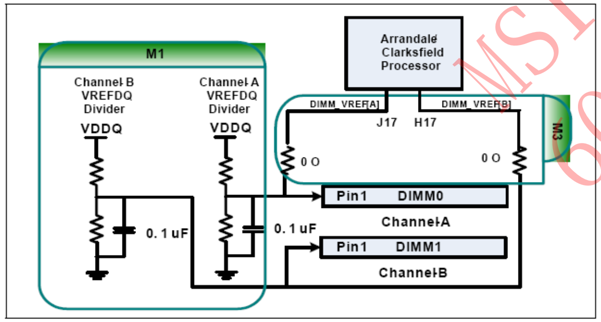
M1
Channel B VREFDQ Divider
Channel A VREFDQ Divider
VDDQ
VDDQ
0.1 uF
0.1 uF
Arrandale Clarksfield Processor
DIMM_VREF[A]
DIMM_VREF[B]
J17
H17
0 O
0 O
M3
Pin1
DIMM0
Channel A
Pin1
DIMM1
Channel B

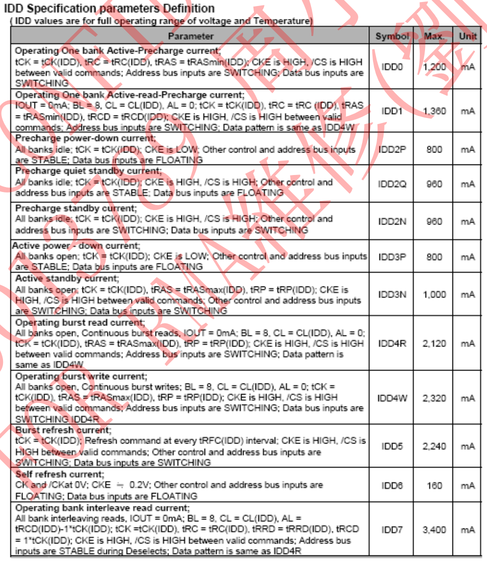

IDD Specification parameters Definition
(IDD values are for full operating range of voltage and Temperature)

Parameter	Symbol	Max.	Unit
Operating One bank Active-Precharge current; tCK = tCK(IDD), tRC = tRC(IDD), tRAS = tRASmin(IDD); CKE is HIGH, /CS is HIGH between valid commands; Address bus inputs are SWITCHING; Data bus inputs are SWITCHING	IDD0	1,200	mA
Operating One bank Active-read-Precharge current; IOUT = 0mA; BL = 8, CL = CL(IDD), AL = 0; tCK = tCK(IDD), tRC = tRC (IDD), tRAS = tRASmin(IDD), tRCD = tRCD(IDD); CKE is HIGH, /CS is HIGH between valid commands; Address bus inputs are SWITCHING; Data pattern is same as IDD4W	IDD1	1,360	mA
Precharge power-down current; All banks idle; tCK = tCK(IDD); CKE is LOW; Other control and address bus inputs are STABLE; Data bus inputs are FLOATING	IDD2P	800	mA
Precharge quiet standby current; All banks idle; tCK = tCK(IDD); CKE is HIGH, /CS is HIGH; Other control and address bus inputs are STABLE; Data bus inputs are FLOATING	IDD2Q	960	mA
Precharge standby current; All banks idle; tCK = tCK(IDD); CKE is HIGH, /CS is HIGH; Other control and address bus inputs are SWITCHING; Data bus inputs are SWITCHING	IDD2N	960	mA
Active power - down current; All banks open; tCK = tCK(IDD); CKE is LOW; Other control and address bus inputs are STABLE; Data bus inputs are FLOATING	IDD3P	800	mA
Active standby current; All banks open; tCK = tCK(IDD), tRAS = tRASmax(IDD), tRP = tRP(IDD); CKE is HIGH, /CS is HIGH between valid commands; Other control and address bus inputs are SWITCHING; Data bus inputs are SWITCHING	IDD3N	1,000	mA
Operating burst read current; All banks open, Continuous burst reads, IOUT = 0mA; BL = 8, CL = CL(IDD), AL = 0; tCK = tCK(IDD), tRAS = tRASmax(IDD), tRP = tRP(IDD); CKE is HIGH, /CS is HIGH between valid commands; Address bus inputs are SWITCHING; Data pattern is same as IDD4W	IDD4R	2,120	mA
Operating burst write current; All banks open, Continuous burst writes; BL = 8, CL = CL(IDD), AL = 0; tCK = tCK(IDD), tRAS = tRASmax(IDD), tRP = tRP(IDD); CKE is HIGH, /CS is HIGH between valid commands; Address bus inputs are SWITCHING; Data bus inputs are SWITCHING IDD4R	IDD4W	2,320	mA
Burst refresh current; tCK = tCK(IDD); Refresh command at every tRFC(IDD) interval; CKE is HIGH, /CS is HIGH between valid commands; Other control and address bus inputs are SWITCHING; Data bus inputs are SWITCHING	IDD5	2,240	mA
Self refresh current; CK and /CKat 0V; CKE ≒ 0.2V; Other control and address bus inputs are FLOATING; Data bus inputs are FLOATING	IDD6	160	mA
Operating bank interleave read current; All bank interleaving reads, IOUT = 0mA; BL = 8, CL = CL(IDD), AL = tRCD(IDD)-1*tCK(IDD); tCK =tCK(IDD), tRC = tRC(IDD), tRRD = tRRD(IDD), tRCD = 1*tCK(IDD); CKE is HIGH, /CS is HIGH between valid commands; Address bus inputs are STABLE during Deselects; Data pattern is same as IDD4R	IDD7	3,400	mA

MSI CONFIDENTIAL RD(C)2010051001 ONLY
600013769 周小強 FOR RMA維修(劉彬林)

MICRO-STAR INT'L CO.,LTD.
Title
DDR3 SODIMM0
Size Custom
Document Number MS-1482
Rev 0A
Date: Friday, October 29, 2010
Sheet 9 of 44

SODIMM#B

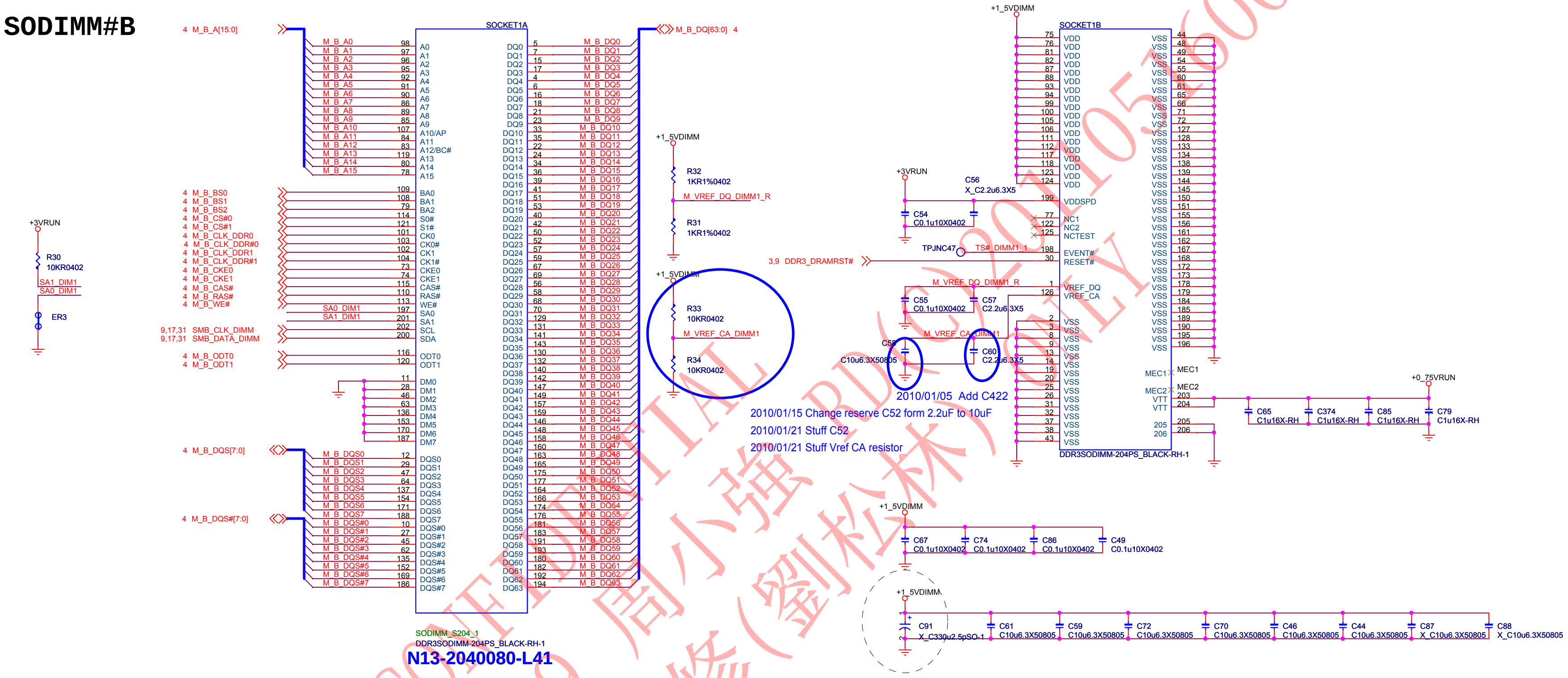
4 M_B_A[15:0]
M_B_DQ[63:0] 4
SOCKET1A
M_B_A0 … M_B_A15
A0 A1 A2 A3 A4 A5 A6 A7 A8 A9 A10/AP A11 A12/BC# A13 A14 A15
4 M_B_BS0
4 M_B_BS1
4 M_B_BS2
4 M_B_CS#0
4 M_B_CS#1
4 M_B_CLK_DDR0
4 M_B_CLK_DDR#0
4 M_B_CLK_DDR1
4 M_B_CLK_DDR#1
4 M_B_CKE0
4 M_B_CKE1
4 M_B_CAS#
4 M_B_RAS#
4 M_B_WE#
BA0 BA1 BA2 S0# S1# CK0 CK0# CK1 CK1# CKE0 CKE1 CAS# RAS# WE# SA0 SA1 SCL SDA ODT0 ODT1
SA0_DIM1
SA1_DIM1
9,17,31 SMB_CLK_DIMM
9,17,31 SMB_DATA_DIMM
4 M_B_ODT0
4 M_B_ODT1
DM0 DM1 DM2 DM3 DM4 DM5 DM6 DM7
4 M_B_DQS[7:0]
M_B_DQS0 … M_B_DQS7
DQS0 DQS1 DQS2 DQS3 DQS4 DQS5 DQS6 DQS7
4 M_B_DQS#[7:0]
M_B_DQS#0 … M_B_DQS#7
DQS#0 DQS#1 DQS#2 DQS#3 DQS#4 DQS#5 DQS#6 DQS#7
DQ0 … DQ63
M_B_DQ0 … M_B_DQ63
SODIMM_S204_1
DDR3SODIMM-204PS_BLACK-RH-1
N13-2040080-L41
+3VRUN
R30
10KR0402
SA1_DIM1
SA0_DIM1
ER3
+1_5VDIMM
R32
1KR1%0402
M_VREF_DQ_DIMM1_R
R31
1KR1%0402
+1_5VDIMM
R33
10KR0402
M_VREF_CA_DIMM1
R34
10KR0402
+1_5VDIMM
SOCKET1B
VDD
VSS
+3VRUN
C56
X_C2.2u6.3X5
C54
C0.1u10X0402
VDDSPD
NC1
NC2
NCTEST
TPJNC47
TS#_DIMM1_1
EVENT#
3,9 DDR3_DRAMRST#
RESET#
M_VREF_DQ_DIMM1_R
VREF_DQ
VREF_CA
C55
C0.1u10X0402
C57
C2.2u6.3X5
M_VREF_CA_DIMM1
C58
C10u6.3X50805
C60
C2.2u6.3X5
MEC1
MEC2
VTT
+0_75VRUN
C65
C1u16X-RH
C374
C1u16X-RH
C85
C1u16X-RH
C79
C1u16X-RH
DDR3SODIMM-204PS_BLACK-RH-1
+1_5VDIMM
C67
C0.1u10X0402
C74
C0.1u10X0402
C86
C0.1u10X0402
C49
C0.1u10X0402
+1_5VDIMM
C91
X_C330u2.5pSO-1
C61
C10u6.3X50805
C59
C10u6.3X50805
C72
C10u6.3X50805
C70
C10u6.3X50805
C46
C10u6.3X50805
C44
C10u6.3X50805
C87
X_C10u6.3X50805
C88
X_C10u6.3X50805

2010/01/05 Add C422

2010/01/15 Change reserve C52 form 2.2uF to 10uF

2010/01/21 Stuff C52

2010/01/21 Stuff Vref CA resistor

MSI CONFIDENTIAL
60013789 周小強 RD(C)20100516001
FOR RMA維修(劉松林) ONLY

MICRO-STAR INT'L CO.,LTD.

Title
DDR3 SODIMM1

Size	Document Number	Rev
Custom	**MS-1482**	0A
Date: Friday, October 29, 2010	Sheet 10 of 44	

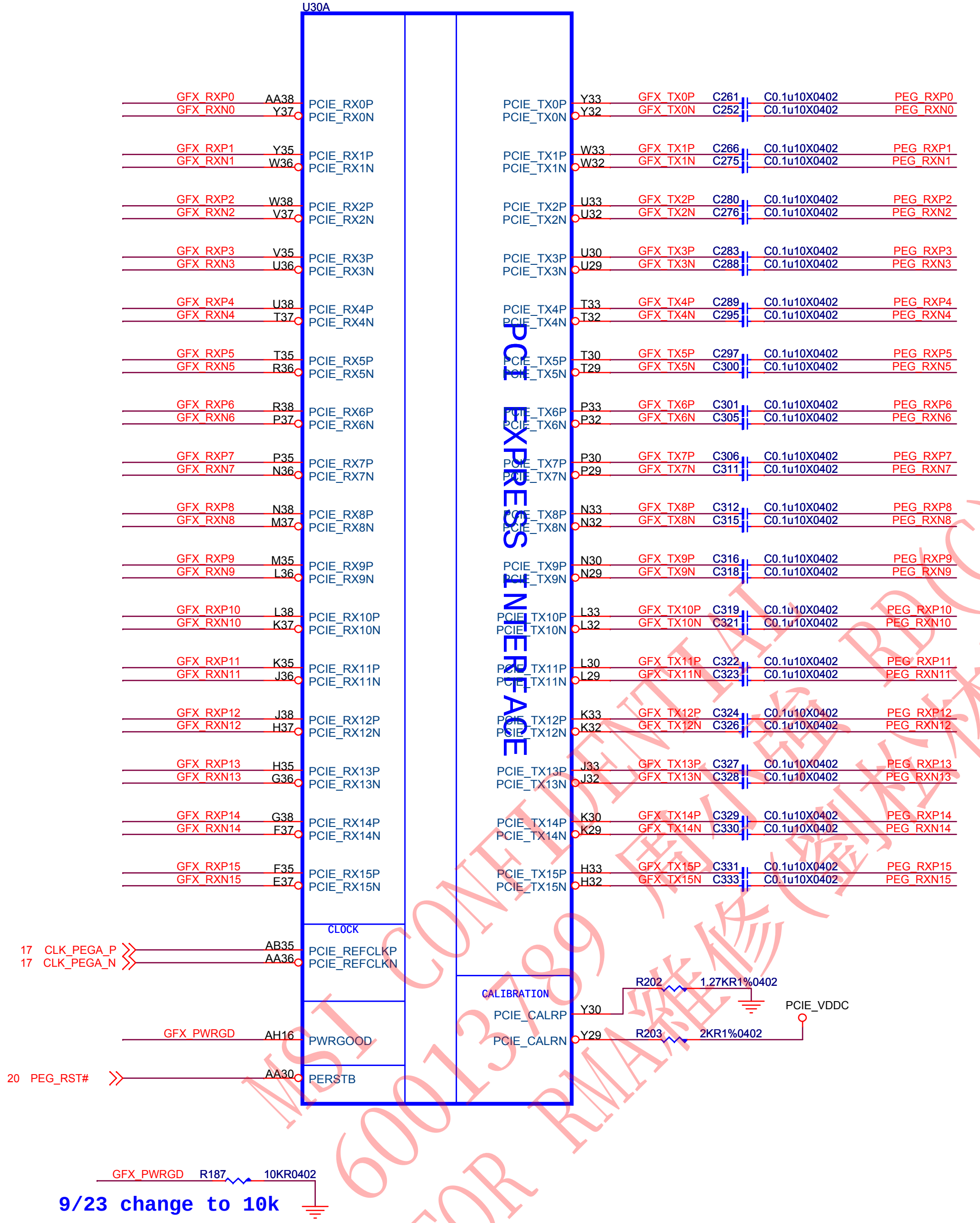
U30A
PCI EXPRESS INTERFACE
GFX_RXP0 AA38 PCIE_RX0P
GFX_RXN0 Y37 PCIE_RX0N
GFX_RXP1 Y35 PCIE_RX1P
GFX_RXN1 W36 PCIE_RX1N
GFX_RXP2 W38 PCIE_RX2P
GFX_RXN2 V37 PCIE_RX2N
GFX_RXP3 V35 PCIE_RX3P
GFX_RXN3 U36 PCIE_RX3N
GFX_RXP4 U38 PCIE_RX4P
GFX_RXN4 T37 PCIE_RX4N
GFX_RXP5 T35 PCIE_RX5P
GFX_RXN5 R36 PCIE_RX5N
GFX_RXP6 R38 PCIE_RX6P
GFX_RXN6 P37 PCIE_RX6N
GFX_RXP7 P35 PCIE_RX7P
GFX_RXN7 N36 PCIE_RX7N
GFX_RXP8 N38 PCIE_RX8P
GFX_RXN8 M37 PCIE_RX8N
GFX_RXP9 M35 PCIE_RX9P
GFX_RXN9 L36 PCIE_RX9N
GFX_RXP10 L38 PCIE_RX10P
GFX_RXN10 K37 PCIE_RX10N
GFX_RXP11 K35 PCIE_RX11P
GFX_RXN11 J36 PCIE_RX11N
GFX_RXP12 J38 PCIE_RX12P
GFX_RXN12 H37 PCIE_RX12N
GFX_RXP13 H35 PCIE_RX13P
GFX_RXN13 G36 PCIE_RX13N
GFX_RXP14 G38 PCIE_RX14P
GFX_RXN14 F37 PCIE_RX14N
GFX_RXP15 F35 PCIE_RX15P
GFX_RXN15 E37 PCIE_RX15N
CLOCK
17 CLK_PEGA_P AB35 PCIE_REFCLKP
17 CLK_PEGA_N AA36 PCIE_REFCLKN
GFX_PWRGD AH16 PWRGOOD
20 PEG_RST# AA30 PERSTB
PCIE_TX0P Y33 GFX_TX0P C261 C0.1u10X0402 PEG_RXP0
PCIE_TX0N Y32 GFX_TX0N C252 C0.1u10X0402 PEG_RXN0
PCIE_TX1P W33 GFX_TX1P C266 C0.1u10X0402 PEG_RXP1
PCIE_TX1N W32 GFX_TX1N C275 C0.1u10X0402 PEG_RXN1
PCIE_TX2P U33 GFX_TX2P C280 C0.1u10X0402 PEG_RXP2
PCIE_TX2N U32 GFX_TX2N C276 C0.1u10X0402 PEG_RXN2
PCIE_TX3P U30 GFX_TX3P C283 C0.1u10X0402 PEG_RXP3
PCIE_TX3N U29 GFX_TX3N C288 C0.1u10X0402 PEG_RXN3
PCIE_TX4P T33 GFX_TX4P C289 C0.1u10X0402 PEG_RXP4
PCIE_TX4N T32 GFX_TX4N C295 C0.1u10X0402 PEG_RXN4
PCIE_TX5P T30 GFX_TX5P C297 C0.1u10X0402 PEG_RXP5
PCIE_TX5N T29 GFX_TX5N C300 C0.1u10X0402 PEG_RXN5
PCIE_TX6P P33 GFX_TX6P C301 C0.1u10X0402 PEG_RXP6
PCIE_TX6N P32 GFX_TX6N C305 C0.1u10X0402 PEG_RXN6
PCIE_TX7P P30 GFX_TX7P C306 C0.1u10X0402 PEG_RXP7
PCIE_TX7N P29 GFX_TX7N C311 C0.1u10X0402 PEG_RXN7
PCIE_TX8P N33 GFX_TX8P C312 C0.1u10X0402 PEG_RXP8
PCIE_TX8N N32 GFX_TX8N C315 C0.1u10X0402 PEG_RXN8
PCIE_TX9P N30 GFX_TX9P C316 C0.1u10X0402 PEG_RXP9
PCIE_TX9N N29 GFX_TX9N C318 C0.1u10X0402 PEG_RXN9
PCIE_TX10P L33 GFX_TX10P C319 C0.1u10X0402 PEG_RXP10
PCIE_TX10N L32 GFX_TX10N C321 C0.1u10X0402 PEG_RXN10
PCIE_TX11P L30 GFX_TX11P C322 C0.1u10X0402 PEG_RXP11
PCIE_TX11N L29 GFX_TX11N C323 C0.1u10X0402 PEG_RXN11
PCIE_TX12P K33 GFX_TX12P C324 C0.1u10X0402 PEG_RXP12
PCIE_TX12N K32 GFX_TX12N C326 C0.1u10X0402 PEG_RXN12
PCIE_TX13P J33 GFX_TX13P C327 C0.1u10X0402 PEG_RXP13
PCIE_TX13N J32 GFX_TX13N C328 C0.1u10X0402 PEG_RXN13
PCIE_TX14P K30 GFX_TX14P C329 C0.1u10X0402 PEG_RXP14
PCIE_TX14N K29 GFX_TX14N C330 C0.1u10X0402 PEG_RXN14
PCIE_TX15P H33 GFX_TX15P C331 C0.1u10X0402 PEG_RXP15
PCIE_TX15N H32 GFX_TX15N C333 C0.1u10X0402 PEG_RXN15
CALIBRATION
PCIE_CALRP Y30 R202 1.27KR1%0402
PCIE_CALRN Y29 R203 2KR1%0402
PCIE_VDDC
GFX_PWRGD R187 10KR0402

9/23 change to 10k

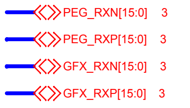
PEG_RXN[15:0] 3
PEG_RXP[15:0] 3
GFX_RXN[15:0] 3
GFX_RXP[15:0] 3

MSI CONFIDENTIAL 周小锋 RD(C)20110516001
600013789 周小锋(创校本) ONLY
FOR RMA维修

MICRO-STAR INT'L CO.,LTD.			
Title ATI VGA PCIE			
Size A3	Document Number MS-1482		Rev 0A
Date:	Friday, October 29, 2010	Sheet 11 of 44	

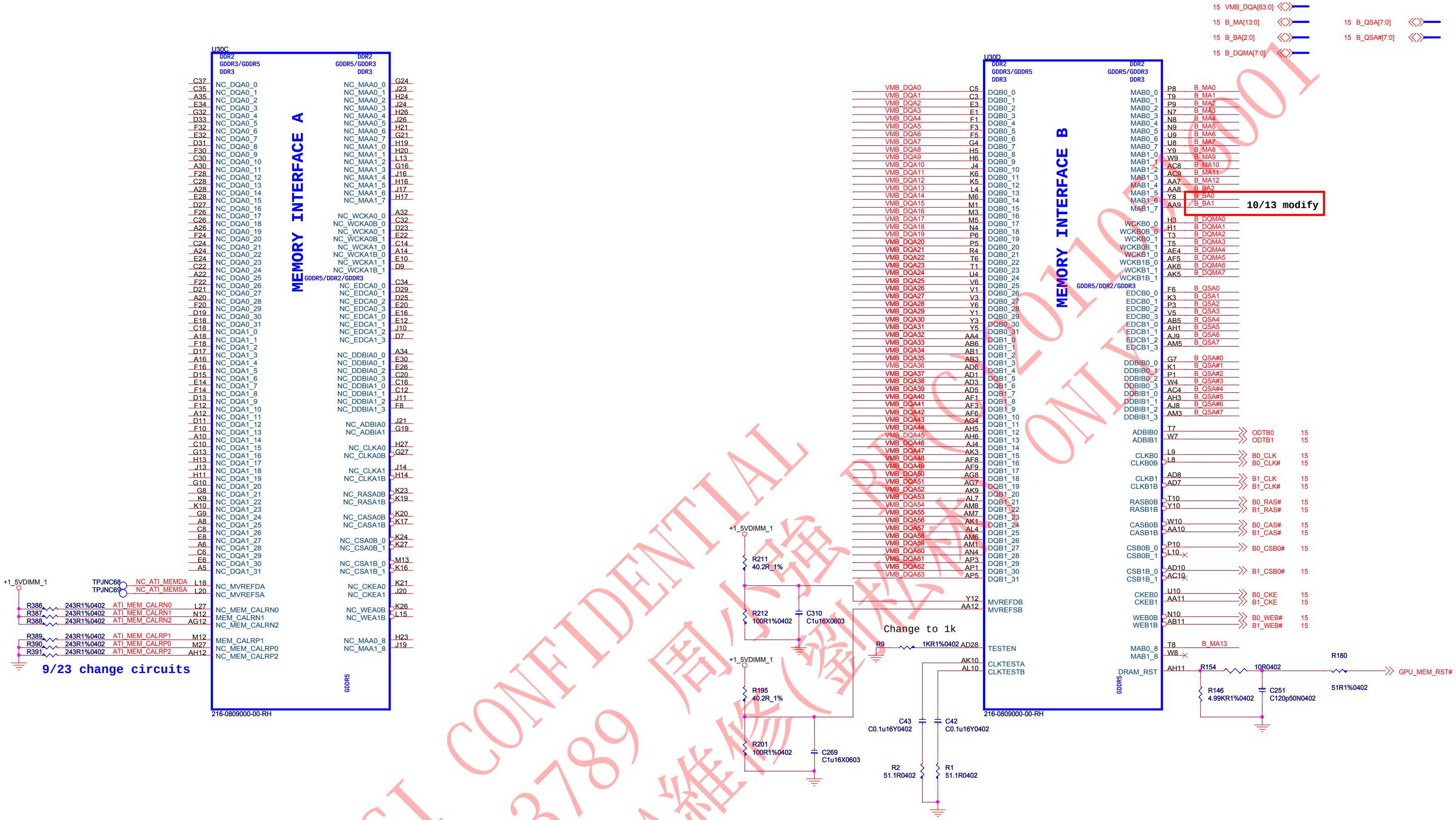
15 VMB_DQA[63:0]
15 B_MA[13:0]
15 B_BA[2:0]
15 B_DQMA[7:0]
15 B_QSA[7:0]
15 B_QSA#[7:0]
U30C
MEMORY INTERFACE A
DDR2
GDDR3/GDDR5
DDR3
GDDR5/GDDR3
GDDR5/DDR2/GDDR3
216-0809000-00-RH
GDDR5
+1_5VDIMM_1
TPJNC68
TPJNC69
NC_ATI_MEMDA
NC_ATI_MEMSA
NC_MVREFDA
NC_MVREFSA
R386 243R1%0402 ATI_MEM_CALRN0
R387 243R1%0402 ATI_MEM_CALRN1
R388 243R1%0402 ATI_MEM_CALRN2
R389 243R1%0402 ATI_MEM_CALRP1
R390 243R1%0402 ATI_MEM_CALRP0
R391 243R1%0402 ATI_MEM_CALRP2
NC_MEM_CALRN0
MEM_CALRN1
NC_MEM_CALRN2
MEM_CALRP1
NC_MEM_CALRP0
NC_MEM_CALRP2
9/23 change circuits
U30D
MEMORY INTERFACE B
VMB_DQA0 … VMB_DQA63
DQB0_0 … DQB0_31
DQB1_0 … DQB1_31
MAB0_0 … MAB0_7
MAB1_0 … MAB1_7
B_MA0 … B_MA12
B_BA2
B_BA0
B_BA1
10/13 modify
B_DQMA0 … B_DQMA7
B_QSA0 … B_QSA7
B_QSA#0 … B_QSA#7
ODTB0 15
ODTB1 15
B0_CLK 15
B0_CLK# 15
B1_CLK 15
B1_CLK# 15
B0_RAS# 15
B1_RAS# 15
B0_CAS# 15
B1_CAS# 15
B0_CSB0# 15
B1_CSB0# 15
B0_CKE 15
B1_CKE 15
B0_WEB# 15
B1_WEB# 15
B_MA13
MVREFDB
MVREFSB
TESTEN
CLKTESTA
CLKTESTB
DRAM_RST
R211 40.2R_1%
R212 100R1%0402
C310 C1u16X0603
R195 40.2R_1%
R201 100R1%0402
C269 C1u16X0603
Change to 1k
R9 1KR1%0402
C43 C0.1u16Y0402
C42 C0.1u16Y0402
R2 51.1R0402
R1 51.1R0402
R154 10R0402
R146 4.99KR1%0402
C251 C120p50N0402
R180 51R1%0402
GPU_MEM_RST# 15

MSI CONFIDENTIAL
60013789 周小強
FOR RMA維修(劉松林)

MICRO-STAR INT'L CO.,LTD.

Title

ATI VGA MEM

Size	Document Number	Rev
A2	**MS-1482**	0A

Date: Friday, October 29, 2010 Sheet 12 of 44

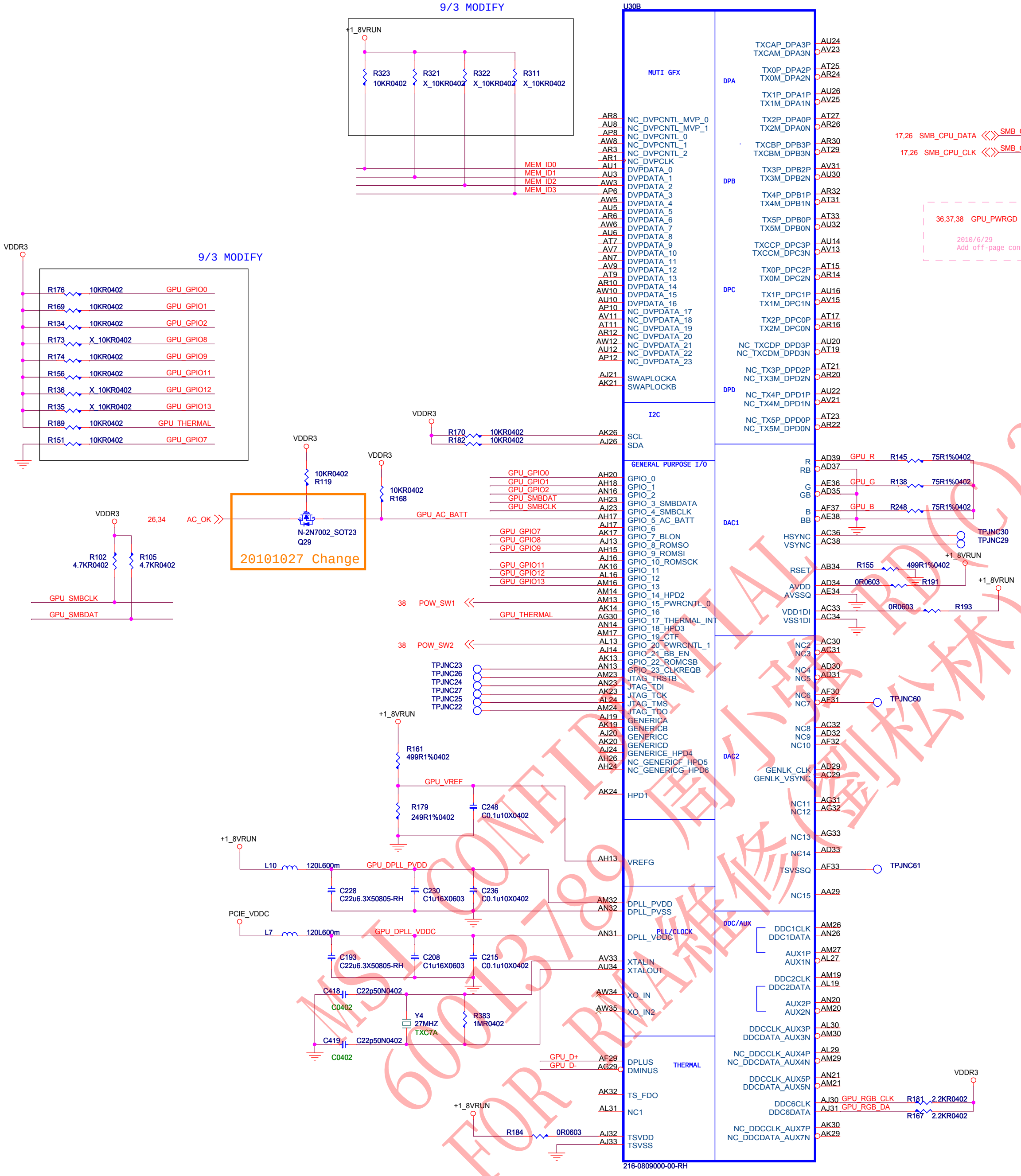
9/3 MODIFY
+1_8VRUN
R323 10KR0402
R321 X_10KR0402
R322 X_10KR0402
R311 X_10KR0402
MEM_ID0
MEM_ID1
MEM_ID2
MEM_ID3
VDDR3
9/3 MODIFY
R176 10KR0402 GPU_GPIO0
R169 10KR0402 GPU_GPIO1
R134 10KR0402 GPU_GPIO2
R173 X_10KR0402 GPU_GPIO8
R174 10KR0402 GPU_GPIO9
R156 10KR0402 GPU_GPIO11
R136 X_10KR0402 GPU_GPIO12
R135 X_10KR0402 GPU_GPIO13
R189 10KR0402 GPU_THERMAL
R151 10KR0402 GPU_GPIO7
VDDR3
R170 10KR0402
R182 10KR0402
VDDR3
10KR0402 R119
VDDR3
10KR0402 R168
VDDR3
26,34 AC_OK
N-2N7002_SOT23 Q29
20101027 Change
GPU_AC_BATT
R102 4.7KR0402
R105 4.7KR0402
GPU_SMBCLK
GPU_SMBDAT
GPU_GPIO0
GPU_GPIO1
GPU_GPIO2
GPU_SMBDAT
GPU_SMBCLK
GPU_GPIO7
GPU_GPIO8
GPU_GPIO9
GPU_GPIO11
GPU_GPIO12
GPU_GPIO13
38 POW_SW1
GPU_THERMAL
38 POW_SW2
TPJNC23
TPJNC26
TPJNC24
TPJNC27
TPJNC25
TPJNC22
+1_8VRUN
R161 499R1%0402
GPU_VREF
R179 249R1%0402
C248 C0.1u10X0402
+1_8VRUN
L10 120L600m GPU_DPLL_PVDD
C228 C22u6.3X50805-RH
C230 C1u16X0603
C236 C0.1u10X0402
PCIE_VDDC
L7 120L600m GPU_DPLL_VDDC
C193 C22u6.3X50805-RH
C208 C1u16X0603
C215 C0.1u10X0402
C418 C22p50N0402 C0402
Y4 27MHZ TXCTA
R383 1MR0402
C419 C22p50N0402 C0402
GPU_D+
GPU_D-
+1_8VRUN
R184 0R0603
U30B
MUTI GFX
AR8 AU8 AP8 AW8 AR3 AR1 AU1 AU3 AW3 AP6 AW5 AU5 AR6 AW6 AU6 AT7 AV7 AN7 AV9 AT9 AR10 AW10 AU10 AP10 AV11 AT11 AR12 AW12 AU12 AP12
NC_DVPCNTL_MVP_0
NC_DVPCNTL_MVP_1
NC_DVPCNTL_0
NC_DVPCNTL_1
NC_DVPCNTL_2
NC_DVPCLK
DVPDATA_0
DVPDATA_1
DVPDATA_2
DVPDATA_3
DVPDATA_4
DVPDATA_5
DVPDATA_6
DVPDATA_7
DVPDATA_8
DVPDATA_9
DVPDATA_10
DVPDATA_11
DVPDATA_12
DVPDATA_13
DVPDATA_14
DVPDATA_15
DVPDATA_16
NC_DVPDATA_17
NC_DVPDATA_18
NC_DVPDATA_19
NC_DVPDATA_20
NC_DVPDATA_21
NC_DVPDATA_22
NC_DVPDATA_23
AJ21 AK21
SWAPLOCKA
SWAPLOCKB
I2C
AK26 AJ26
SCL
SDA
GENERAL PURPOSE I/O
AH20 AH18 AN16 AH23 AJ23 AH17 AJ17 AK17 AJ13 AH15 AJ16 AK16 AL16 AM16 AM14 AM13 AK14 AG30 AN14 AM17 AL13 AJ14 AK13 AN13 AM23 AN23 AK23 AL24 AM24
GPIO_0
GPIO_1
GPIO_2
GPIO_3_SMBDATA
GPIO_4_SMBCLK
GPIO_5_AC_BATT
GPIO_6
GPIO_7_BLON
GPIO_8_ROMSO
GPIO_9_ROMSI
GPIO_10_ROMSCK
GPIO_11
GPIO_12
GPIO_13
GPIO_14_HPD2
GPIO_15_PWRCNTL_0
GPIO_16
GPIO_17_THERMAL_INT
GPIO_18_HPD3
GPIO_19_CTF
GPIO_20_PWRCNTL_1
GPIO_21_BB_EN
GPIO_22_ROMCSB
GPIO_23_CLKREQB
JTAG_TRSTB
JTAG_TDI
JTAG_TCK
JTAG_TMS
JTAG_TDO
AJ19 AK19 AJ20 AK20 AJ24 AH26 AH24
GENERICA
GENERICB
GENERICC
GENERICD
GENERICE_HPD4
NC_GENERICF_HPD5
NC_GENERICG_HPD6
AK24 HPD1
AH13 VREFG
AM32 AN32 DPLL_PVDD DPLL_PVSS
AN31 DPLL_VDDC
PLL/CLOCK
AV33 AU34 XTALIN XTALOUT
AW34 XO_IN
AW35 XO_IN2
AF29 AG29 DPLUS DMINUS
THERMAL
AK32 TS_FDO
AL31 NC1
AJ32 AJ33 TSVDD TSVSS
216-0809000-00-RH
DPA
TXCAP_DPA3P TXCAM_DPA3N AU24 AV23
TX0P_DPA2P TX0M_DPA2N AT25 AR24
TX1P_DPA1P TX1M_DPA1N AU26 AV25
TX2P_DPA0P TX2M_DPA0N AT27 AR26
DPB
TXCBP_DPB3P TXCBM_DPB3N AR30 AT29
TX3P_DPB2P TX3M_DPB2N AV31 AU30
TX4P_DPB1P TX4M_DPB1N AR32 AT31
TX5P_DPB0P TX5M_DPB0N AT33 AU32
DPC
TXCCP_DPC3P TXCCM_DPC3N AU14 AV13
TX0P_DPC2P TX0M_DPC2N AT15 AR14
TX1P_DPC1P TX1M_DPC1N AU16 AV15
TX2P_DPC0P TX2M_DPC0N AT17 AR16
DPD
NC_TXCDP_DPD3P NC_TXCDM_DPD3N AU20 AT19
NC_TX3P_DPD2P NC_TX3M_DPD2N AT21 AR20
NC_TX4P_DPD1P NC_TX4M_DPD1N AU22 AV21
NC_TX5P_DPD0P NC_TX5M_DPD0N AT23 AR22
DAC1
R RB AD39 AD37 GPU_R R145 75R1%0402
G GB AE36 AD35 GPU_G R138 75R1%0402
B BB AF37 AE38 GPU_B R248 75R1%0402
HSYNC VSYNC AC36 AC38 TPJNC30 TPJNC29
+1_8VRUN
RSET AB34 R155 499R1%0402
AVDD AVSSQ AD34 AE34 0R0603 R191
+1_8VRUN
VDD1DI VSS1DI AC33 AC34 0R0603 R193
NC2 NC3 AC30 AC31
NC4 NC5 AD30 AD31
NC6 NC7 AF30 AF31 TPJNC60
DAC2
NC8 NC9 NC10 AC32 AD32 AF32
GENLK_CLK GENLK_VSYNC AD29 AC29
NC11 NC12 AG31 AG32
NC13 AG33
NC14 AD33
TSVSSQ AF33 TPJNC61
NC15 AA29
DDC/AUX
DDC1CLK DDC1DATA AM26 AN26
AUX1P AUX1N AM27 AL27
DDC2CLK DDC2DATA AM19 AL19
AUX2P AUX2N AN20 AM20
DDCCLK_AUX3P DDCDATA_AUX3N AL30 AM30
NC_DDCCLK_AUX4P NC_DDCDATA_AUX4N AL29 AM29
DDCCLK_AUX5P DDCDATA_AUX5N AN21 AM21
DDC6CLK DDC6DATA AJ30 AJ31 GPU_RGB_CLK GPU_RGB_DA
VDDR3
R181 2.2KR0402
R167 2.2KR0402
NC_DDCCLK_AUX7P NC_DDCDATA_AUX7N AK30 AK29
17,26 SMB_CPU_DATA
17,26 SMB_CPU_CLK
36,37,38 GPU_PWRGD
2010/6/29 Add off-page connector

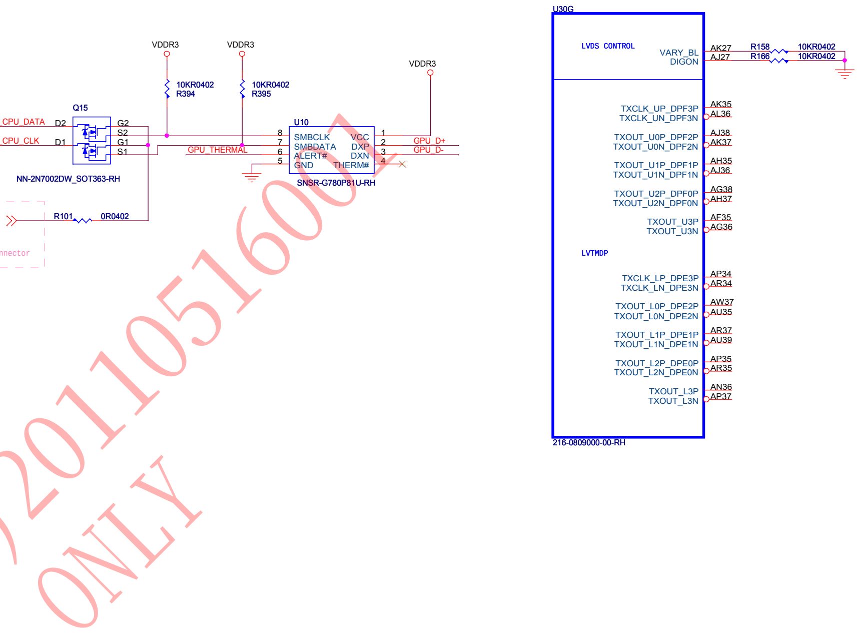
VDDR3
VDDR3
VDDR3
10KR0402 R394
10KR0402 R395
Q15
SMB_CPU_DATA
SMB_CPU_CLK
D2 D1 G2 S2 G1 S1
NN-2N7002DW_SOT363-RH
GPU_THERMAL
U10
SMBCLK SMBDATA ALERT# GND
VCC DXP DXN THERM#
8 7 6 5 1 2 3 4
GPU_D+
GPU_D-
SNSR-G780P81U-RH
R101 0R0402
U30G
LVDS CONTROL
VARY_BL DIGON AK27 AJ27
R158 10KR0402
R166 10KR0402
TXCLK_UP_DPF3P TXCLK_UN_DPF3N AK35 AL36
TXOUT_U0P_DPF2P TXOUT_U0N_DPF2N AJ38 AK37
TXOUT_U1P_DPF1P TXOUT_U1N_DPF1N AH35 AJ36
TXOUT_U2P_DPF0P TXOUT_U2N_DPF0N AG38 AH37
TXOUT_U3P TXOUT_U3N AF35 AG36
LVTMDP
TXCLK_LP_DPE3P TXCLK_LN_DPE3N AP34 AR34
TXOUT_L0P_DPE2P TXOUT_L0N_DPE2N AW37 AU35
TXOUT_L1P_DPE1P TXOUT_L1N_DPE1N AR37 AU39
TXOUT_L2P_DPE0P TXOUT_L2N_DPE0N AP35 AR35
TXOUT_L3P TXOUT_L3N AN36 AP37
216-0809000-00-RH

MSI CONFIDENTIAL 60013789 周小娟 RD(C)20110516001 FOR RMA維修(劉松林) ONLY

CONFIGURATION STRAPS

ALLOW FOR PULLUP PADS FOR THESE STRAPS AND IF THESE GPIOS ARE USED, THEY MUST NOT CONFLICT DURING RESET

STRAPS	PIN	DESCRIPTION OF DEFAULT SETTINGS	RECOMMENDED SETTINGS 0= DO NOT INSTALL RESISTOR 1 = INSTALL 10K RESISTOR X = DESIGN DEPENDANT NA = NOT APPLICABLE
TX_PWRS_ENB	GPIO0	PCIE FULL TX OUTPUT SWING	1
TX_DEEMPH_EN	GPIO1	PCIE TRANSMITTER DE-EMPHASIS ENABLED	1
BIF_GEN2_EN_A	GPIO2	PCIE GNE2 ENABLED	1
BIF_CLK_PM_EN BIF_VGA DIS BIF_RX_PLL_CALIB_BP	GPIO8 GPIO9 GPIO21	BIF_CLK_PM_EN VGA ENABLED BIF_RX_PLL_CALIB_BP	0 0 0
BIOS_ROM_EN	GPIO_22_ROMCSB	ENABLE EXTERNAL BIOS ROM	1
ROMIDCFG(2:0)	GPIO[13:11]	SERIAL ROM TYPE OR MEMORY APERTURE SIZE SELECT	X X X
VIP_DEVICE_STRAP_ENA	V2SYNC	IGNORE VIP DEVICE STRAPS	0
SMS_EN_HARD CCBYPASS AUD[1] AUD[0]	H2SYNC GENERICC HSYNC VSYNC	 built-in HDMI connector Audio functiuon present	0 0 1 1

AMD RESERVED CONFIGURATION STRAPS

ALLOW FOR PULLUP PADS FOR THESE STRAPS AND IF THESE GPIOS ARE USED, THEY MUST NOT CONFLICT DURING RESET

H2SYNC GENERICC

PULLUP PADS ARE NOT REQUIRED FOR THESE STRAPS BUT IF THESE GPIOS ARE USED, THEY MUST NOT CONFLICT DURING RESET

GPIO_28_TDO GPIO21_BB_EN

MICRO-STAR INT'L CO.,LTD.

Title	ATI VGA DP	
Size A2	Document Number MS-1482	Rev 0A
Date: Friday, October 29, 2010	Sheet 13 of 44	

BACO enable just close the core power

PX_EN=0, for Normal Operation

PX_EN =1, for BACO MODE

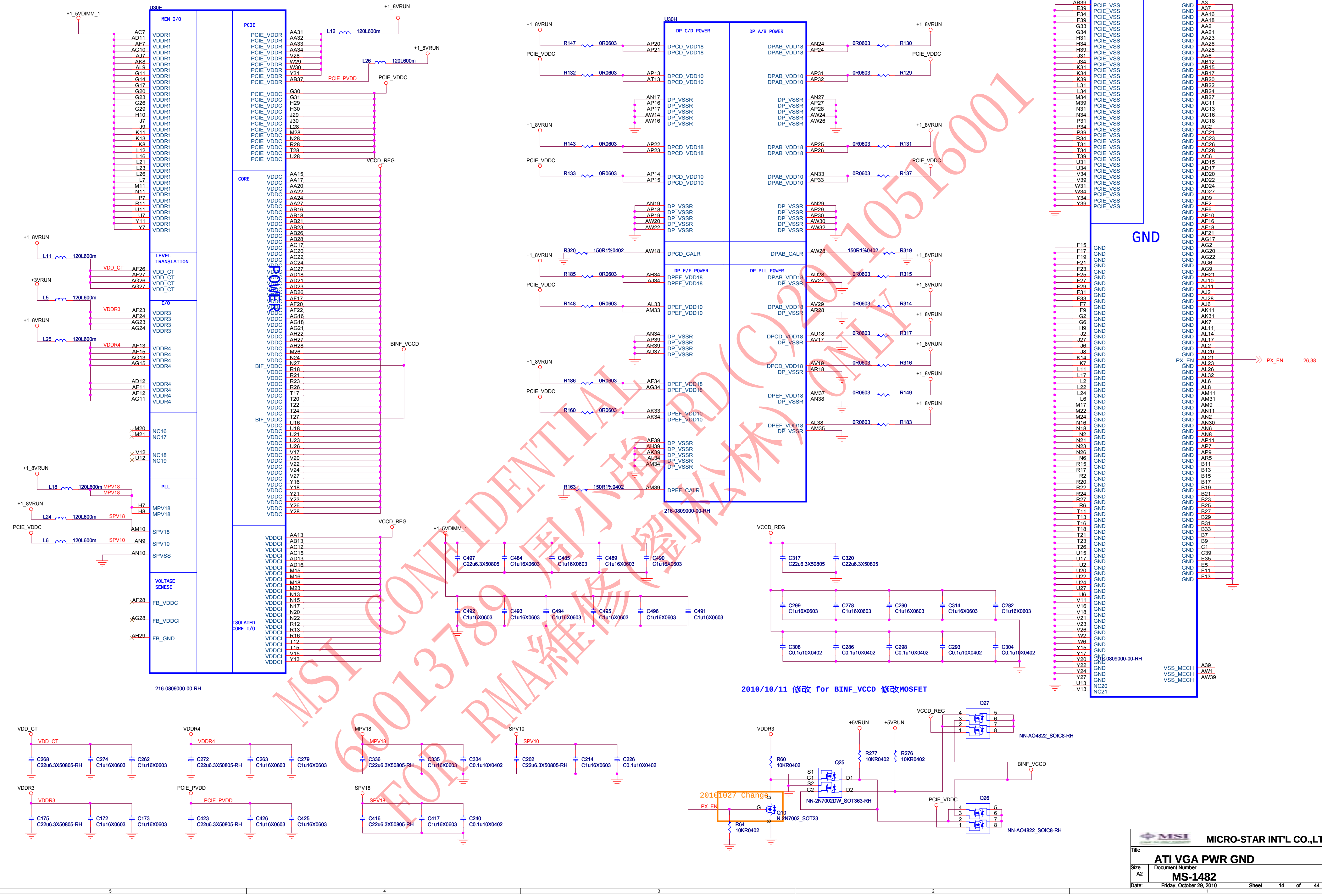
U30E
MEM I/O
PCIE
CORE
POWER
LEVEL TRANSLATION
I/O
PLL
VOLTAGE SENESE
ISOLATED CORE I/O
216-0809000-00-RH
+1_5VDIMM_1
+1_8VRUN
+3VRUN
PCIE_VDDC
PCIE_PVDD
VCCD_REG
BINF_VCCD
VDD_CT
VDDR3
VDDR4
MPV18
SPV18
SPV10
L12 120L600m
L26 120L600m
L11 120L600m
L5 120L600m
L25 120L600m
L18 120L600m
L24 120L600m
L6 120L600m
VDDR1
PCIE_VDDR
PCIE_VDDC
VDDC
BIF_VDDC
VDDCI
NC16
NC17
NC18
NC19
SPVSS
FB_VDDC
FB_VDDCI
FB_GND
U30H
DP C/D POWER
DP A/B POWER
DP E/F POWER
DP PLL POWER
DPCD_VDD18
DPCD_VDD10
DPAB_VDD18
DPAB_VDD10
DP_VSSR
DPCD_CALR
DPAB_CALR
DPEF_VDD18
DPEF_VDD10
DPEF_CALR
R147 0R0603
R132 0R0603
R143 0R0603
R133 0R0603
R320 150R1%0402
R185 0R0603
R148 0R0603
R186 0R0603
R160 0R0603
R163 150R1%0402
R130 0R0603
R129 0R0603
R131 0R0603
R137 0R0603
R319 150R1%0402
R315 0R0603
R314 0R0603
R317 0R0603
R316 0R0603
R149 0R0603
R183 0R0603
216-0809000-00-RH
U30F
PCIE_VSS
GND
PX_EN
26,38
VSS_MECH
NC20
NC21
216-0809000-00-RH
C497 C22u6.3X50805
C484 C1u16X0603
C485 C1u16X0603
C489 C1u16X0603
C490 C1u16X0603
C492 C1u16X0603
C493 C1u16X0603
C494 C1u16X0603
C495 C1u16X0603
C496 C1u16X0603
C491 C1u16X0603
C317 C22u6.3X50805
C320 C22u6.3X50805
C299 C1u16X0603
C278 C1u16X0603
C290 C1u16X0603
C314 C1u16X0603
C282 C1u16X0603
C308 C0.1u10X0402
C286 C0.1u10X0402
C298 C0.1u10X0402
C293 C0.1u10X0402
C304 C0.1u10X0402
C268 C22u6.3X50805-RH
C274 C1u16X0603
C262 C1u16X0603
C272 C22u6.3X50805-RH
C263 C1u16X0603
C279 C1u16X0603
C336 C22u6.3X50805-RH
C335 C1u16X0603
C334 C0.1u10X0402
C202 C22u6.3X50805-RH
C214 C1u16X0603
C226 C0.1u10X0402
C175 C22u6.3X50805-RH
C172 C1u16X0603
C173 C1u16X0603
C423 C22u6.3X50805-RH
C426 C1u16X0603
C425 C1u16X0603
C416 C22u6.3X50805-RH
C417 C1u16X0603
C240 C0.1u10X0402
2010/10/11 修改 for BINF_VCCD 修改MOSFET
Q27
NN-AO4822_SOIC8-RH
Q26
NN-AO4822_SOIC8-RH
+5VRUN
R277 10KR0402
R276 10KR0402
R60 10KR0402
Q25
NN-2N7002DW_SOT363-RH
S1 G1 S2 G2 D1 D2
20101027 Change
PX_EN
Q10
N-2N7002_SOT23
R64 10KR0402

MSI CONFIDENTIAL 600013789 周小琪 PD(C)201105160001 FOR RMA維修(劉松林) ONLY

MICRO-STAR INT'L CO.,LTD.

Title
ATI VGA PWR GND

Size	Document Number	Rev
A2	**MS-1482**	0A

Date: Friday, October 29, 2010 Sheet 14 of 44

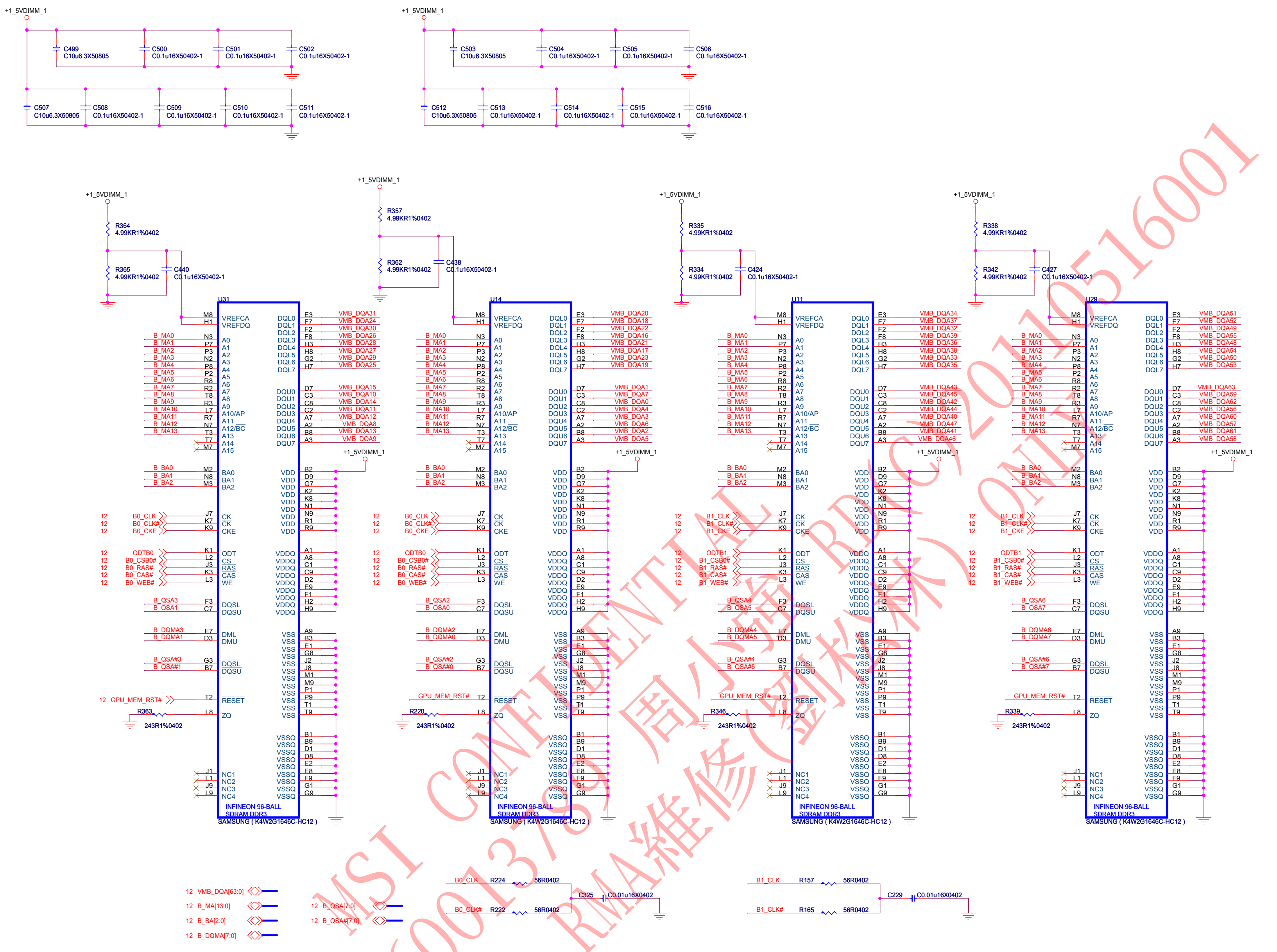

+1_5VDIMM_1
C499 C10u6.3X50805
C500 C0.1u16X50402-1
C501 C0.1u16X50402-1
C502 C0.1u16X50402-1
C507 C10u6.3X50805
C508 C0.1u16X50402-1
C509 C0.1u16X50402-1
C510 C0.1u16X50402-1
C511 C0.1u16X50402-1
C503 C10u6.3X50805
C504 C0.1u16X50402-1
C505 C0.1u16X50402-1
C506 C0.1u16X50402-1
C512 C10u6.3X50805
C513 C0.1u16X50402-1
C514 C0.1u16X50402-1
C515 C0.1u16X50402-1
C516 C0.1u16X50402-1
R364 4.99KR1%0402
R365 4.99KR1%0402
C440 C0.1u16X50402-1
R357 4.99KR1%0402
R362 4.99KR1%0402
C438 C0.1u16X50402-1
R335 4.99KR1%0402
R334 4.99KR1%0402
C424 C0.1u16X50402-1
R338 4.99KR1%0402
R342 4.99KR1%0402
C427 C0.1u16X50402-1
U31
U14
U11
U29
VREFCA VREFDQ
A0 A1 A2 A3 A4 A5 A6 A7 A8 A9 A10/AP A11 A12/BC A13 A14 A15
BA0 BA1 BA2
CK CK CKE
ODT CS RAS CAS WE
DQSL DQSU DML DMU DQSL DQSU
RESET ZQ
NC1 NC2 NC3 NC4
DQL0 DQL1 DQL2 DQL3 DQL4 DQL5 DQL6 DQL7
DQU0 DQU1 DQU2 DQU3 DQU4 DQU5 DQU6 DQU7
VDD VDDQ VSS VSSQ
B_MA0 B_MA1 B_MA2 B_MA3 B_MA4 B_MA5 B_MA6 B_MA7 B_MA8 B_MA9 B_MA10 B_MA11 B_MA12 B_MA13
B_BA0 B_BA1 B_BA2
U31: VMB_DQA31 VMB_DQA24 VMB_DQA30 VMB_DQA26 VMB_DQA28 VMB_DQA27 VMB_DQA29 VMB_DQA25 VMB_DQA15 VMB_DQA10 VMB_DQA14 VMB_DQA11 VMB_DQA12 VMB_DQA8 VMB_DQA13 VMB_DQA9
12 B0_CLK 12 B0_CLK# 12 B0_CKE
12 ODTB0 12 B0_CSB0# 12 B0_RAS# 12 B0_CAS# 12 B0_WEB#
B_QSA3 B_QSA1 B_DQMA3 B_DQMA1 B_QSA#3 B_QSA#1
12 GPU_MEM_RST#
R363 243R1%0402
U14: VMB_DQA20 VMB_DQA18 VMB_DQA22 VMB_DQA16 VMB_DQA21 VMB_DQA17 VMB_DQA23 VMB_DQA19 VMB_DQA1 VMB_DQA7 VMB_DQA0 VMB_DQA4 VMB_DQA3 VMB_DQA6 VMB_DQA2 VMB_DQA5
B_QSA2 B_QSA0 B_DQMA2 B_DQMA0 B_QSA#2 B_QSA#0
GPU_MEM_RST#
R220 243R1%0402
U11: VMB_DQA34 VMB_DQA37 VMB_DQA32 VMB_DQA39 VMB_DQA36 VMB_DQA38 VMB_DQA33 VMB_DQA35 VMB_DQA43 VMB_DQA45 VMB_DQA42 VMB_DQA44 VMB_DQA40 VMB_DQA47 VMB_DQA41 VMB_DQA46
12 B1_CLK 12 B1_CLK# 12 B1_CKE
12 ODTB1 12 B1_CSB0# 12 B1_RAS# 12 B1_CAS# 12 B1_WEB#
B_QSA4 B_QSA5 B_DQMA4 B_DQMA5 B_QSA#4 B_QSA#5
GPU_MEM_RST#
R346 243R1%0402
U29: VMB_DQA51 VMB_DQA52 VMB_DQA49 VMB_DQA55 VMB_DQA48 VMB_DQA54 VMB_DQA50 VMB_DQA53 VMB_DQA63 VMB_DQA59 VMB_DQA62 VMB_DQA56 VMB_DQA60 VMB_DQA57 VMB_DQA61 VMB_DQA58
B_QSA6 B_QSA7 B_DQMA6 B_DQMA7 B_QSA#6 B_QSA#7
GPU_MEM_RST#
R339 243R1%0402
INFINEON 96-BALL SDRAM DDR3
SAMSUNG (K4W2G1646C-HC12)
12 VMB_DQA[63:0]
12 B_MA[13:0]
12 B_BA[2:0]
12 B_DQMA[7:0]
12 B_QSA[7:0]
12 B_QSA#[7:0]
B0_CLK R224 56R0402
B0_CLK# R222 56R0402
C325 C0.01u16X0402
B1_CLK R157 56R0402
B1_CLK# R165 56R0402
C229 C0.01u16X0402

MSI CONFIDENTIAL
60013759 周小預 RD(C)20110516001
FOR RMA維修(劉彬琳) ONLY

MICRO-STAR INT'L CO.,LTD.

Title
VRAM B

Size	Document Number	Rev
A2	MS-1482	0A

Date: Friday, October 29, 2010 | Sheet 15 of 44

COUGAR POINT (HDA,JTAG,SATA)

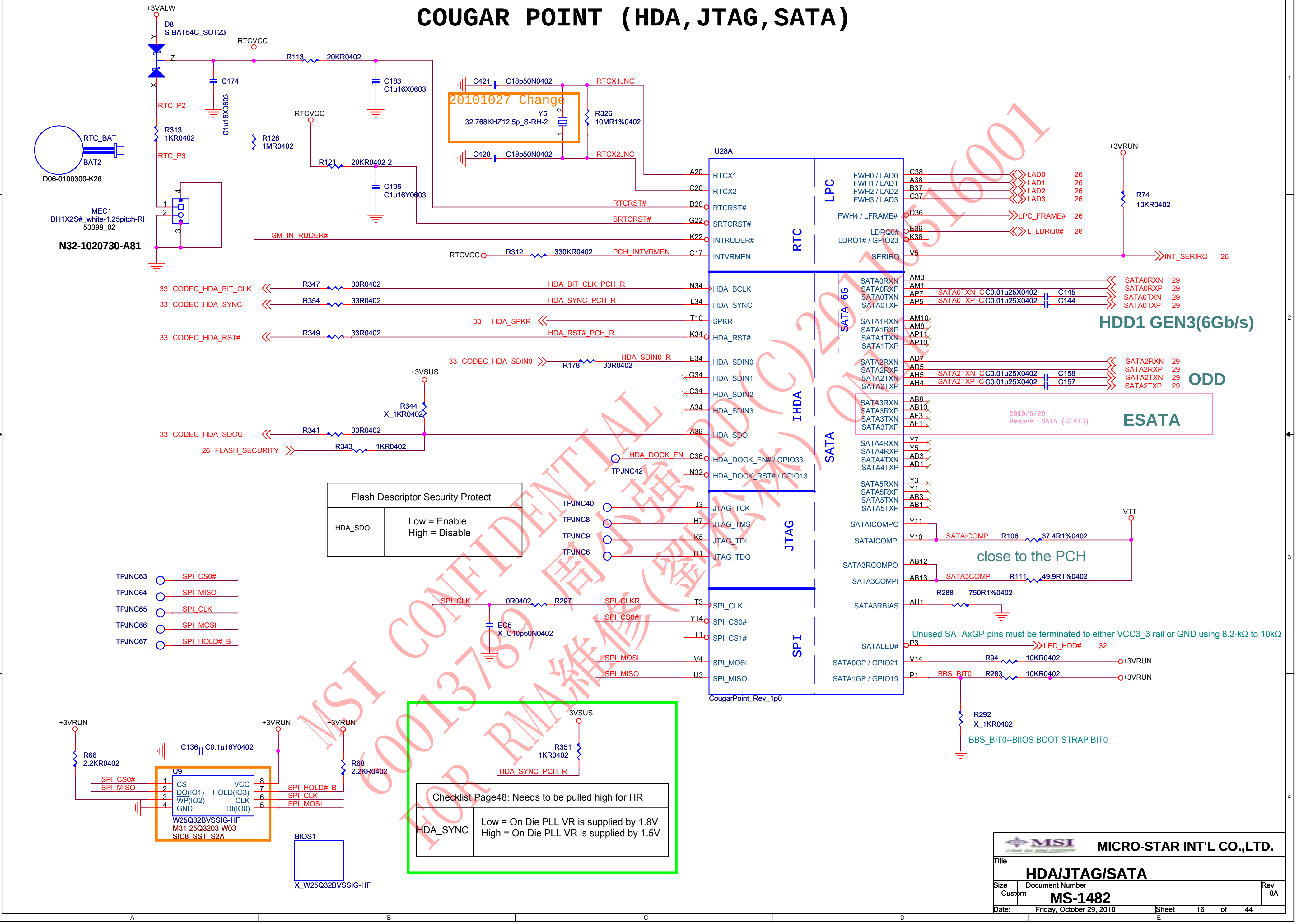

+3VALW
D8
S-BAT54C_SOT23
RTCVCC
R113
20KR0402
C174
C1u16X0603
C183
C1u16X0603
RTC_P2
R313
1KR0402
RTC_P3
RTC_BAT
BAT2
D06-0100300-K26
R128
1MR0402
RTCVCC
R121
20KR0402-2
C195
C1u16Y0603
MEC1
BH1X2S#_white-1.25pitch-RH
53398_02
N32-1020730-A81
C421
C18p50N0402
C420
C18p50N0402
20101027 Change
Y5
32.768KHZ12.5p_S-RH-2
R326
10MR1%0402
RTCX1JNC
RTCX2JNC
RTCRST#
SRTCRST#
SM_INTRUDER#
RTCVCC
R312
330KR0402
PCH_INTVRMEN
U28A
RTCX1
RTCX2
RTCRST#
SRTCRST#
INTRUDER#
INTVRMEN
RTC
LPC
FWH0 / LAD0
FWH1 / LAD1
FWH2 / LAD2
FWH3 / LAD3
FWH4 / LFRAME#
LDRQ0#
LDRQ1# / GPIO23
SERIRQ
LAD0 26
LAD1 26
LAD2 26
LAD3 26
LPC_FRAME# 26
L_LDRQ0# 26
+3VRUN
R74
10KR0402
INT_SERIRQ 26
33 CODEC_HDA_BIT_CLK
33 CODEC_HDA_SYNC
33 HDA_SPKR
33 CODEC_HDA_RST#
R347 33R0402
R354 33R0402
R349 33R0402
HDA_BIT_CLK_PCH_R
HDA_SYNC_PCH_R
HDA_RST#_PCH_R
33 CODEC_HDA_SDIN0
R178 33R0402
HDA_SDIN0_R
+3VSUS
R344
X_1KR0402
33 CODEC_HDA_SDOUT
R341 33R0402
26 FLASH_SECURITY
R343 1KR0402
HDA_DOCK_EN
TPJNC42
HDA_BCLK
HDA_SYNC
SPKR
HDA_RST#
HDA_SDIN0
HDA_SDIN1
HDA_SDIN2
HDA_SDIN3
HDA_SDO
HDA_DOCK_EN# / GPIO33
HDA_DOCK_RST# / GPIO13
IHDA
SATA 6G
SATA
SATA0RXN
SATA0RXP
SATA0TXN
SATA0TXP
SATA1RXN
SATA1RXP
SATA1TXN
SATA1TXP
SATA2RXN
SATA2RXP
SATA2TXN
SATA2TXP
SATA3RXN
SATA3RXP
SATA3TXN
SATA3TXP
SATA4RXN
SATA4RXP
SATA4TXN
SATA4TXP
SATA5RXN
SATA5RXP
SATA5TXN
SATA5TXP
SATAICOMPO
SATAICOMPI
SATA3RCOMPO
SATA3COMPI
SATA3RBIAS
SATALED#
SATA0GP / GPIO21
SATA1GP / GPIO19
SATA0TXN_C C0.01u25X0402 C145
SATA0TXP_C C0.01u25X0402 C144
SATA0RXN 29
SATA0RXP 29
SATA0TXN 29
SATA0TXP 29
HDD1 GEN3(6Gb/s)
SATA2TXN_C C0.01u25X0402 C158
SATA2TXP_C C0.01u25X0402 C157
SATA2RXN 29
SATA2RXP 29
SATA2TXN 29
SATA2TXP 29
ODD
2010/6/29
Remove ESATA (STAT3)
ESATA
VTT
SATAICOMP
R106
37.4R1%0402
close to the PCH
SATA3COMP
R111
49.9R1%0402
R288
750R1%0402
Unused SATAxGP pins must be terminated to either VCC3_3 rail or GND using 8.2-kΩ to 10kΩ
LED_HDD# 32
R94 10KR0402 +3VRUN
BBS_BIT0
R283 10KR0402 +3VRUN
R292
X_1KR0402
BBS_BIT0--BIIOS BOOT STRAP BIT0
Flash Descriptor Security Protect
HDA_SDO
Low = Enable
High = Disable
TPJNC40
TPJNC8
TPJNC9
TPJNC6
JTAG_TCK
JTAG_TMS
JTAG_TDI
JTAG_TDO
JTAG
SPI_CLK
0R0402 R297
SPI_CLKR
EC5
X_C10p50N0402
SPI_CS0#
SPI_MOSI
SPI_MISO
SPI_CLK
SPI_CS0#
SPI_CS1#
SPI_MOSI
SPI_MISO
SPI
CougarPoint_Rev_1p0
TPJNC63 SPI_CS0#
TPJNC64 SPI_MISO
TPJNC65 SPI_CLK
TPJNC66 SPI_MOSI
TPJNC67 SPI_HOLD#_B
+3VRUN
R66
2.2KR0402
C136 C0.1u16Y0402
+3VRUN
R68
2.2KR0402
U9
CS
DO(IO1)
WP(IO2)
GND
VCC
HOLD(IO3)
CLK
DI(IO0)
SPI_HOLD#_B
SPI_CLK
SPI_MOSI
W25Q32BVSSIG-HF
M31-25Q3203-W03
SIC8_SST_S2A
BIOS1
X_W25Q32BVSSIG-HF
+3VSUS
R351
1KR0402
HDA_SYNC_PCH_R
Checklist Page48: Needs to be pulled high for HR
HDA_SYNC
Low = On Die PLL VR is supplied by 1.8V
High = On Die PLL VR is supplied by 1.5V

MSI CONFIDENTIAL 600013789 周小強 FOR RMA維修(劉德林) ONLY (C)20101016001

MICRO-STAR INT'L CO.,LTD.

Title
HDA/JTAG/SATA

Size Custom | Document Number **MS-1482** | Rev 0A

Date: Friday, October 29, 2010 | Sheet 16 of 44

COUGAR POINT (PCI-E,SMBUS,CLK)

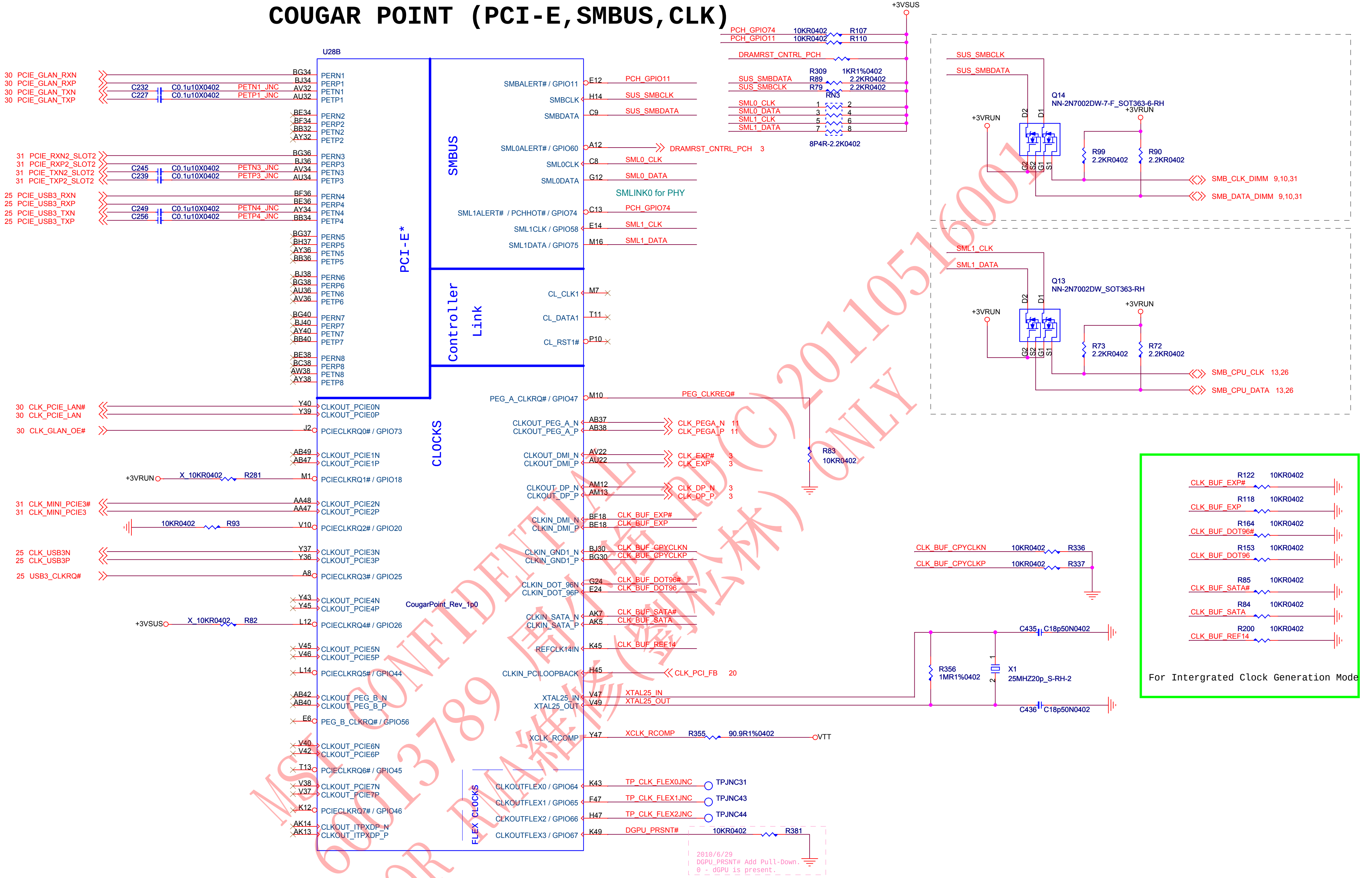

+3VSUS
PCH_GPIO74 10KR0402 R107
PCH_GPIO11 10KR0402 R110
DRAMRST_CNTRL_PCH
R309 1KR1%0402
SUS_SMBDATA R89 2.2KR0402
SUS_SMBCLK R79 2.2KR0402
RN3
SML0_CLK 1 2
SML0_DATA 3 4
SML1_CLK 5 6
SML1_DATA 7 8
8P4R-2.2K0402
U28B
30 PCIE_GLAN_RXN BG34 PERN1
30 PCIE_GLAN_RXP BJ34 PERP1
30 PCIE_GLAN_TXN C232 C0.1u10X0402 PETN1_JNC AV32 PETN1
30 PCIE_GLAN_TXP C227 C0.1u10X0402 PETP1_JNC AU32 PETP1
BE34 PERN2
BF34 PERP2
BB32 PETN2
AY32 PETP2
31 PCIE_RXN2_SLOT2 BG36 PERN3
31 PCIE_RXP2_SLOT2 BJ36 PERP3
31 PCIE_TXN2_SLOT2 C245 C0.1u10X0402 PETN3_JNC AV34 PETN3
31 PCIE_TXP2_SLOT2 C239 C0.1u10X0402 PETP3_JNC AU34 PETP3
25 PCIE_USB3_RXN BF36 PERN4
25 PCIE_USB3_RXP BE36 PERP4
25 PCIE_USB3_TXN C249 C0.1u10X0402 PETN4_JNC AY34 PETN4
25 PCIE_USB3_TXP C256 C0.1u10X0402 PETP4_JNC BB34 PETP4
BG37 PERN5
BH37 PERP5
AY36 PETN5
BB36 PETP5
BJ38 PERN6
BG38 PERP6
AU36 PETN6
AV36 PETP6
BG40 PERN7
BJ40 PERP7
AY40 PETN7
BB40 PETP7
BE38 PERN8
BC38 PERP8
AW38 PETN8
AY38 PETP8
PCI-E*
SMBUS
SMBALERT# / GPIO11 E12 PCH_GPIO11
SMBCLK H14 SUS_SMBCLK
SMBDATA C9 SUS_SMBDATA
SML0ALERT# / GPIO60 A12 DRAMRST_CNTRL_PCH 3
SML0CLK C8 SML0_CLK
SML0DATA G12 SML0_DATA
SMLINK0 for PHY
SML1ALERT# / PCHHOT# / GPIO74 C13 PCH_GPIO74
SML1CLK / GPIO58 E14 SML1_CLK
SML1DATA / GPIO75 M16 SML1_DATA
Controller Link
CL_CLK1 M7
CL_DATA1 T11
CL_RST1# P10
CLOCKS
30 CLK_PCIE_LAN# Y40 CLKOUT_PCIE0N
30 CLK_PCIE_LAN Y39 CLKOUT_PCIE0P
30 CLK_GLAN_OE# J2 PCIECLKRQ0# / GPIO73
AB49 CLKOUT_PCIE1N
AB47 CLKOUT_PCIE1P
+3VRUN X_10KR0402 R281 M1 PCIECLKRQ1# / GPIO18
31 CLK_MINI_PCIE3# AA48 CLKOUT_PCIE2N
31 CLK_MINI_PCIE3 AA47 CLKOUT_PCIE2P
10KR0402 R93 V10 PCIECLKRQ2# / GPIO20
25 CLK_USB3N Y37 CLKOUT_PCIE3N
25 CLK_USB3P Y36 CLKOUT_PCIE3P
25 USB3_CLKRQ# A8 PCIECLKRQ3# / GPIO25
Y43 CLKOUT_PCIE4N
Y45 CLKOUT_PCIE4P
CougarPoint_Rev_1p0
+3VSUS X_10KR0402 R82 L12 PCIECLKRQ4# / GPIO26
V45 CLKOUT_PCIE5N
V46 CLKOUT_PCIE5P
L14 PCIECLKRQ5# / GPIO44
AB42 CLKOUT_PEG_B_N
AB40 CLKOUT_PEG_B_P
E6 PEG_B_CLKRQ# / GPIO56
V40 CLKOUT_PCIE6N
V42 CLKOUT_PCIE6P
T13 PCIECLKRQ6# / GPIO45
V38 CLKOUT_PCIE7N
V37 CLKOUT_PCIE7P
K12 PCIECLKRQ7# / GPIO46
AK14 CLKOUT_ITPXDP_N
AK13 CLKOUT_ITPXDP_P
PEG_A_CLKRQ# / GPIO47 M10 PEG_CLKREQ#
CLKOUT_PEG_A_N AB37 CLK_PEGA_N 11
CLKOUT_PEG_A_P AB38 CLK_PEGA_P 11
R83 10KR0402
CLKOUT_DMI_N AV22 CLK_EXP# 3
CLKOUT_DMI_P AU22 CLK_EXP 3
CLKOUT_DP_N AM12 CLK_DP_N 3
CLKOUT_DP_P AM13 CLK_DP_P 3
CLKIN_DMI_N BF18 CLK_BUF_EXP#
CLKIN_DMI_P BE18 CLK_BUF_EXP
CLKIN_GND1_N BJ30 CLK_BUF_CPYCLKN
CLKIN_GND1_P BG30 CLK_BUF_CPYCLKP
CLKIN_DOT_96N G24 CLK_BUF_DOT96#
CLKIN_DOT_96P E24 CLK_BUF_DOT96
CLKIN_SATA_N AK7 CLK_BUF_SATA#
CLKIN_SATA_P AK5 CLK_BUF_SATA
REFCLK14IN K45 CLK_BUF_REF14
CLKIN_PCILOOPBACK H45 CLK_PCI_FB 20
XTAL25_IN V47 XTAL25_IN
XTAL25_OUT V49 XTAL25_OUT
XCLK_RCOMP Y47 XCLK_RCOMP R355 90.9R1%0402 VTT
FLEX CLOCKS
CLKOUTFLEX0 / GPIO64 K43 TP_CLK_FLEX0JNC TPJNC31
CLKOUTFLEX1 / GPIO65 F47 TP_CLK_FLEX1JNC TPJNC43
CLKOUTFLEX2 / GPIO66 H47 TP_CLK_FLEX2JNC TPJNC44
CLKOUTFLEX3 / GPIO67 K49 DGPU_PRSNT# 10KR0402 R381
2010/6/29
DGPU_PRSNT# Add Pull-Down.
0 - dGPU is present.
SUS_SMBCLK
SUS_SMBDATA
Q14
NN-2N7002DW-7-F_SOT363-6-RH
+3VRUN
+3VRUN
D2 D1 G2 S2 G1 S1
R99 2.2KR0402
R90 2.2KR0402
SMB_CLK_DIMM 9,10,31
SMB_DATA_DIMM 9,10,31
SML1_CLK
SML1_DATA
Q13
NN-2N7002DW_SOT363-RH
+3VRUN
+3VRUN
D2 D1 G2 S2 G1 S1
R73 2.2KR0402
R72 2.2KR0402
SMB_CPU_CLK 13,26
SMB_CPU_DATA 13,26
R122 10KR0402 CLK_BUF_EXP#
R118 10KR0402 CLK_BUF_EXP
R164 10KR0402 CLK_BUF_DOT96#
R153 10KR0402 CLK_BUF_DOT96
R85 10KR0402 CLK_BUF_SATA#
R84 10KR0402 CLK_BUF_SATA
R200 10KR0402 CLK_BUF_REF14
For Intergrated Clock Generation Mode
CLK_BUF_CPYCLKN 10KR0402 R336
CLK_BUF_CPYCLKP 10KR0402 R337
C435 C18p50N0402
R356 1MR1%0402
X1 25MHZ20p_S-RH-2
1 2
C436 C18p50N0402

MSI CONFIDENTIAL 600013789 周小虎 RD (C) 20110516001 FOR RMA维修(刘松林) ONLY

MICRO-STAR INT'L CO.,LTD.

Title

PCI-E/SMBUS/CLK

Size Custom
Document Number **MS-1482**
Rev 0A

Date: Friday, October 29, 2010 Sheet 17 of 44

COUGAR POINT (DMI,FDI,GPIO)

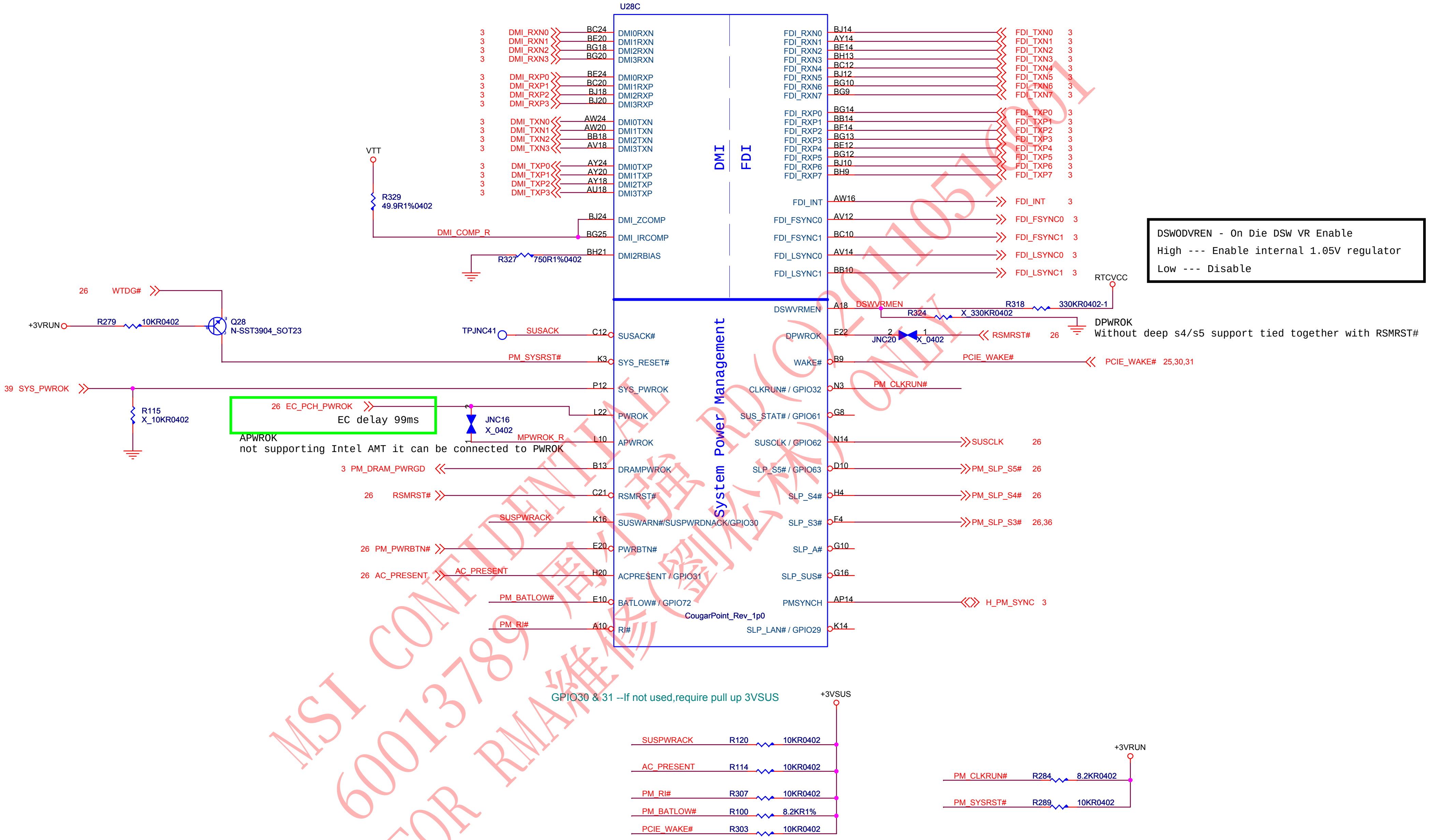

U28C
DMI
FDI
System Power Management
CougarPoint_Rev_1p0
3 DMI_RXN0 BC24 DMI0RXN
3 DMI_RXN1 BE20 DMI1RXN
3 DMI_RXN2 BG18 DMI2RXN
3 DMI_RXN3 BG20 DMI3RXN
3 DMI_RXP0 BE24 DMI0RXP
3 DMI_RXP1 BC20 DMI1RXP
3 DMI_RXP2 BJ18 DMI2RXP
3 DMI_RXP3 BJ20 DMI3RXP
3 DMI_TXN0 AW24 DMI0TXN
3 DMI_TXN1 AW20 DMI1TXN
3 DMI_TXN2 BB18 DMI2TXN
3 DMI_TXN3 AV18 DMI3TXN
3 DMI_TXP0 AY24 DMI0TXP
3 DMI_TXP1 AY20 DMI1TXP
3 DMI_TXP2 AY18 DMI2TXP
3 DMI_TXP3 AU18 DMI3TXP
VTT
R329
49.9R1%0402
DMI_COMP_R
BJ24 DMI_ZCOMP
BG25 DMI_IRCOMP
BH21 DMI2RBIAS
R327 750R1%0402
FDI_RXN0 BJ14 FDI_TXN0 3
FDI_RXN1 AY14 FDI_TXN1 3
FDI_RXN2 BE14 FDI_TXN2 3
FDI_RXN3 BH13 FDI_TXN3 3
FDI_RXN4 BC12 FDI_TXN4 3
FDI_RXN5 BJ12 FDI_TXN5 3
FDI_RXN6 BG10 FDI_TXN6 3
FDI_RXN7 BG9 FDI_TXN7 3
FDI_RXP0 BG14 FDI_TXP0 3
FDI_RXP1 BB14 FDI_TXP1 3
FDI_RXP2 BF14 FDI_TXP2 3
FDI_RXP3 BG13 FDI_TXP3 3
FDI_RXP4 BE12 FDI_TXP4 3
FDI_RXP5 BG12 FDI_TXP5 3
FDI_RXP6 BJ10 FDI_TXP6 3
FDI_RXP7 BH9 FDI_TXP7 3
FDI_INT AW16 FDI_INT 3
FDI_FSYNC0 AV12 FDI_FSYNC0 3
FDI_FSYNC1 BC10 FDI_FSYNC1 3
FDI_LSYNC0 AV14 FDI_LSYNC0 3
FDI_LSYNC1 BB10 FDI_LSYNC1 3
26 WTDG#
+3VRUN R279 10KR0402
Q28
N-SST3904_SOT23
TPJNC41 SUSACK C12 SUSACK#
PM_SYSRST# K3 SYS_RESET#
39 SYS_PWROK P12 SYS_PWROK
R115
X_10KR0402
26 EC_PCH_PWROK
JNC16
X_0402
MPWROK_R
L22 PWROK
L10 APWROK
3 PM_DRAM_PWRGD B13 DRAMPWROK
26 RSMRST# C21 RSMRST#
SUSPWRACK K16 SUSWARN#/SUSPWRDNACK/GPIO30
26 PM_PWRBTN# E20 PWRBTN#
26 AC_PRESENT AC_PRESENT H20 ACPRESENT / GPIO31
PM_BATLOW# E10 BATLOW# / GPIO72
PM_RI# A10 RI#
DSWVRMEN A18 DSWVRMEN R318 330KR0402-1
RTCVCC
R324 X_330KR0402
DPWROK E22 JNC20 2 1 X_0402 RSMRST# 26
WAKE# B9 PCIE_WAKE# PCIE_WAKE# 25,30,31
CLKRUN# / GPIO32 N3 PM_CLKRUN#
SUS_STAT# / GPIO61 G8
SUSCLK / GPIO62 N14 SUSCLK 26
SLP_S5# / GPIO63 D10 PM_SLP_S5# 26
SLP_S4# H4 PM_SLP_S4# 26
SLP_S3# F4 PM_SLP_S3# 26,36
SLP_A# G10
SLP_SUS# G16
PMSYNCH AP14 H_PM_SYNC 3
SLP_LAN# / GPIO29 K14
+3VSUS
SUSPWRACK R120 10KR0402
AC_PRESENT R114 10KR0402
PM_RI# R307 10KR0402
PM_BATLOW# R100 8.2KR1%
PCIE_WAKE# R303 10KR0402
+3VRUN
PM_CLKRUN# R284 8.2KR0402
PM_SYSRST# R289 10KR0402

EC delay 99ms

APWROK
not supporting Intel AMT it can be connected to PWROK

DSWODVREN - On Die DSW VR Enable
High --- Enable internal 1.05V regulator
Low --- Disable

DPWROK
Without deep s4/s5 support tied together with RSMRST#

GPIO30 & 31 --If not used,require pull up 3VSUS

MSI CONFIDENTIAL
60013789 周小玻 RD(C)201105160 1
FOR RMA维修(刘松林) ONLY

MICRO-STAR INT'L CO.,LTD.
Title
DMI/FDI/GPIO
Size Custom
Document Number **MS-1482**
Rev 0A
Date: Friday, October 29, 2010
Sheet 18 of 44

COUGAR POINT (LVDS,DDI)

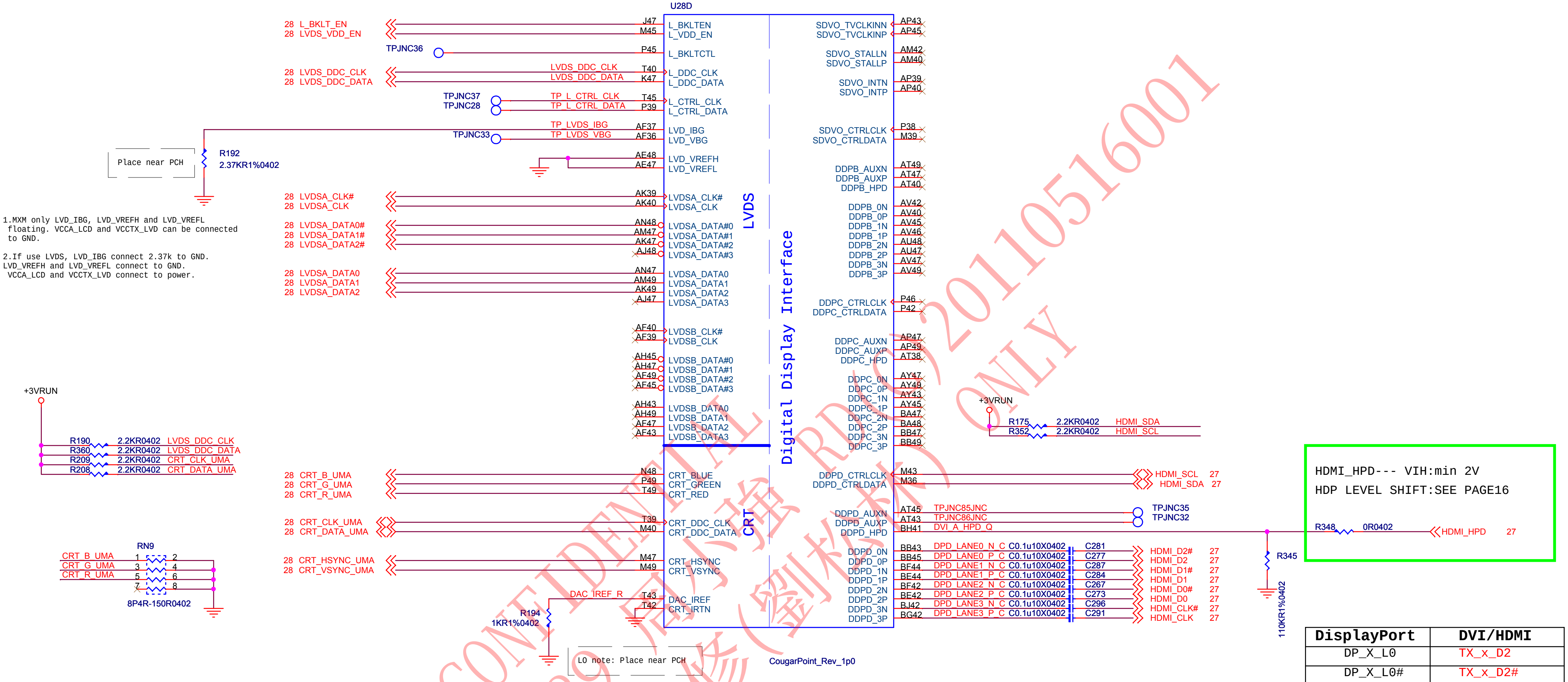
U28D
CougarPoint_Rev_1p0
LVDS
CRT
Digital Display Interface
28 L_BKLT_EN
28 LVDS_VDD_EN
TPJNC36
28 LVDS_DDC_CLK
28 LVDS_DDC_DATA
LVDS_DDC_CLK
LVDS_DDC_DATA
TPJNC37
TPJNC28
TP_L_CTRL_CLK
TP_L_CTRL_DATA
TP_LVDS_IBG
TPJNC33
TP_LVDS_VBG
Place near PCH
R192
2.37KR1%0402
28 LVDSA_CLK#
28 LVDSA_CLK
28 LVDSA_DATA0#
28 LVDSA_DATA1#
28 LVDSA_DATA2#
28 LVDSA_DATA0
28 LVDSA_DATA1
28 LVDSA_DATA2
J47 L_BKLTEN
M45 L_VDD_EN
P45 L_BKLTCTL
T40 L_DDC_CLK
K47 L_DDC_DATA
T45 L_CTRL_CLK
P39 L_CTRL_DATA
AF37 LVD_IBG
AF36 LVD_VBG
AE48 LVD_VREFH
AE47 LVD_VREFL
AK39 LVDSA_CLK#
AK40 LVDSA_CLK
AN48 LVDSA_DATA#0
AM47 LVDSA_DATA#1
AK47 LVDSA_DATA#2
AJ48 LVDSA_DATA#3
AN47 LVDSA_DATA0
AM49 LVDSA_DATA1
AK49 LVDSA_DATA2
AJ47 LVDSA_DATA3
AF40 LVDSB_CLK#
AF39 LVDSB_CLK
AH45 LVDSB_DATA#0
AH47 LVDSB_DATA#1
AF49 LVDSB_DATA#2
AF45 LVDSB_DATA#3
AH43 LVDSB_DATA0
AH49 LVDSB_DATA1
AF47 LVDSB_DATA2
AF43 LVDSB_DATA3
N48 CRT_BLUE
P49 CRT_GREEN
T49 CRT_RED
T39 CRT_DDC_CLK
M40 CRT_DDC_DATA
M47 CRT_HSYNC
M49 CRT_VSYNC
T43 DAC_IREF
T42 CRT_IRTN
SDVO_TVCLKINN AP43
SDVO_TVCLKINP AP45
SDVO_STALLN AM42
SDVO_STALLP AM40
SDVO_INTN AP39
SDVO_INTP AP40
SDVO_CTRLCLK P38
SDVO_CTRLDATA M39
DDPB_AUXN AT49
DDPB_AUXP AT47
DDPB_HPD AT40
DDPB_0N AV42
DDPB_0P AV40
DDPB_1N AV45
DDPB_1P AV46
DDPB_2N AU48
DDPB_2P AU47
DDPB_3N AV47
DDPB_3P AV49
DDPC_CTRLCLK P46
DDPC_CTRLDATA P42
DDPC_AUXN AP47
DDPC_AUXP AP49
DDPC_HPD AT38
DDPC_0N AY47
DDPC_0P AY49
DDPC_1N AY43
DDPC_1P AY45
DDPC_2N BA47
DDPC_2P BA48
DDPC_3N BB47
DDPC_3P BB49
DDPD_CTRLCLK M43
DDPD_CTRLDATA M36
DDPD_AUXN AT45
DDPD_AUXP AT43
DDPD_HPD BH41
DDPD_0N BB43
DDPD_0P BB45
DDPD_1N BF44
DDPD_1P BE44
DDPD_2N BF42
DDPD_2P BE42
DDPD_3N BJ42
DDPD_3P BG42
+3VRUN
R175 2.2KR0402 HDMI_SDA
R352 2.2KR0402 HDMI_SCL
HDMI_SCL 27
HDMI_SDA 27
TPJNC85JNC
TPJNC86JNC
TPJNC35
TPJNC32
DVI_A_HPD_Q
R348 0R0402 HDMI_HPD 27
R345
110KR1%0402
DPD_LANE0_N_C C0.1u10X0402 C281 HDMI_D2# 27
DPD_LANE0_P_C C0.1u10X0402 C277 HDMI_D2 27
DPD_LANE1_N_C C0.1u10X0402 C287 HDMI_D1# 27
DPD_LANE1_P_C C0.1u10X0402 C284 HDMI_D1 27
DPD_LANE2_N_C C0.1u10X0402 C267 HDMI_D0# 27
DPD_LANE2_P_C C0.1u10X0402 C273 HDMI_D0 27
DPD_LANE3_N_C C0.1u10X0402 C296 HDMI_CLK# 27
DPD_LANE3_P_C C0.1u10X0402 C291 HDMI_CLK 27
+3VRUN
R190 2.2KR0402 LVDS_DDC_CLK
R360 2.2KR0402 LVDS_DDC_DATA
R209 2.2KR0402 CRT_CLK_UMA
R208 2.2KR0402 CRT_DATA_UMA
28 CRT_B_UMA
28 CRT_G_UMA
28 CRT_R_UMA
28 CRT_CLK_UMA
28 CRT_DATA_UMA
28 CRT_HSYNC_UMA
28 CRT_VSYNC_UMA
RN9
CRT_B_UMA
CRT_G_UMA
CRT_R_UMA
8P4R-150R0402
DAC_IREF_R
R194
1KR1%0402
LO note: Place near PCH

1.MXM only LVD_IBG, LVD_VREFH and LVD_VREFL floating. VCCA_LCD and VCCTX_LVD can be connected to GND.

2.If use LVDS, LVD_IBG connect 2.37k to GND.
LVD_VREFH and LVD_VREFL connect to GND.
VCCA_LCD and VCCTX_LVD connect to power.

HDMI_HPD--- VIH:min 2V

HDP LEVEL SHIFT:SEE PAGE16

DisplayPort	DVI/HDMI
DP_X_L0	TX_x_D2
DP_X_L0#	TX_x_D2#
DP_X_L1	TX_x_D1
DP_X_L1#	TX_x_D1#
DP_X_L2	TX_x_D0
DP_X_L2#	TX_x_D0#
DP_X_L3	TX_x_CLK
DP_X_L3#	TX_x_CLK#
DP_X_AUX	DDC_x_CLK
DP_X_AUX#	DDC_x_DATA

MSI CONFIDENTIAL
60013789 周小強 RD(C)20110516001
FOR RMA維修(劉彬彬) ONLY

MICRO-STAR INT'L CO.,LTD.
Title
PCH_LVDS/DDI
Size Custom
Document Number MS-1482
Rev 0A
Date: Friday, October 29, 2010
Sheet 19 of 44

COUGAR POINT (PCI,USB,NVRAM)

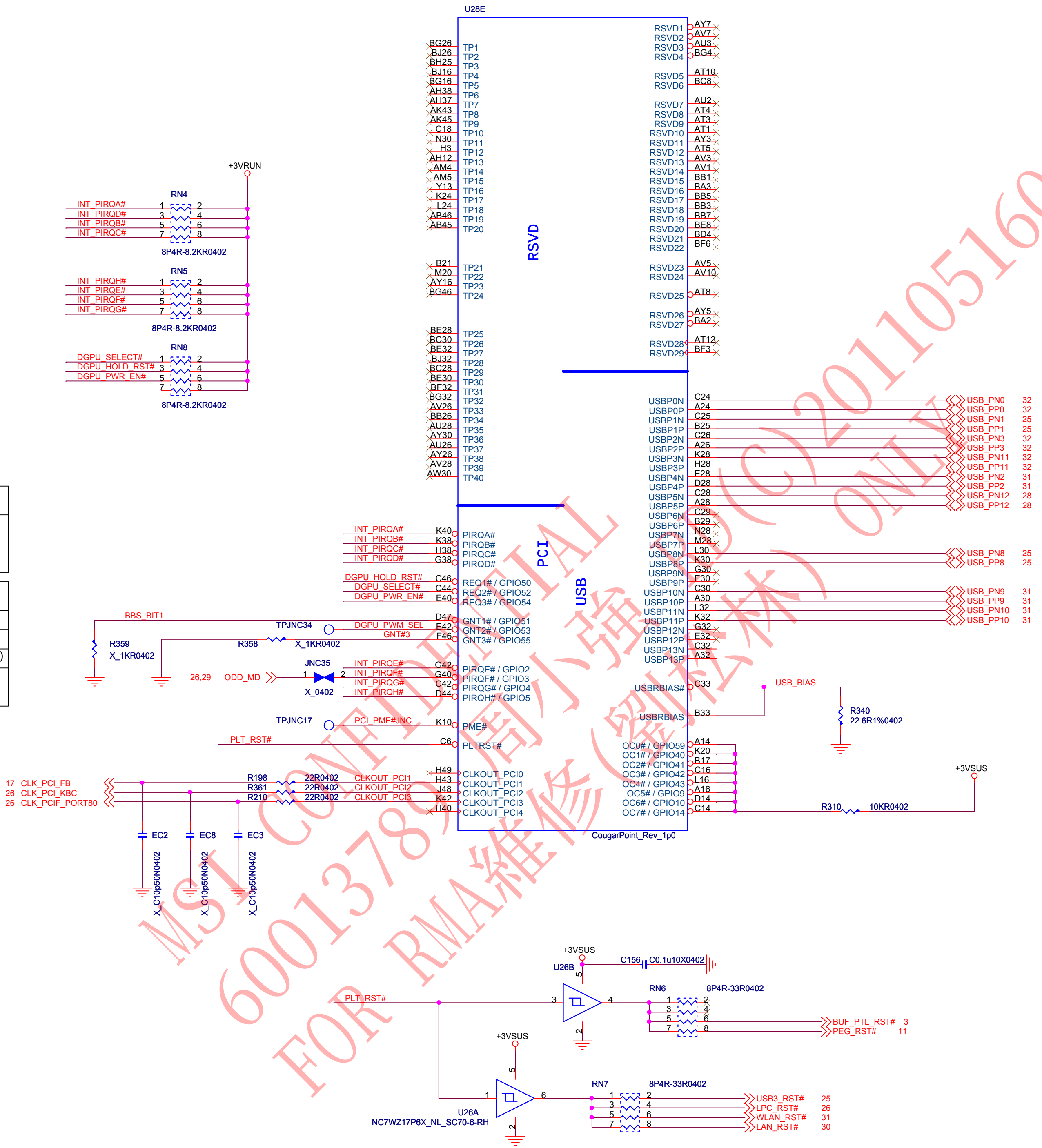

U28E
BG26 TP1
BJ26 TP2
BH25 TP3
BJ16 TP4
BG16 TP5
AH38 TP6
AH37 TP7
AK43 TP8
AK45 TP9
C18 TP10
N30 TP11
H3 TP12
AH12 TP13
AM4 TP14
AM5 TP15
Y13 TP16
K24 TP17
L24 TP18
AB46 TP19
AB45 TP20
B21 TP21
M20 TP22
AY16 TP23
BG46 TP24
BE28 TP25
BC30 TP26
BE32 TP27
BJ32 TP28
BC28 TP29
BE30 TP30
BF32 TP31
BG32 TP32
AV26 TP33
BB26 TP34
AU28 TP35
AY30 TP36
AU26 TP37
AY26 TP38
AV28 TP39
AW30 TP40
RSVD
RSVD1 AY7
RSVD2 AV7
RSVD3 AU3
RSVD4 BG4
RSVD5 AT10
RSVD6 BC8
RSVD7 AU2
RSVD8 AT4
RSVD9 AT3
RSVD10 AT1
RSVD11 AY3
RSVD12 AT5
RSVD13 AV3
RSVD14 AV1
RSVD15 BB1
RSVD16 BA3
RSVD17 BB5
RSVD18 BB3
RSVD19 BB7
RSVD20 BE8
RSVD21 BD4
RSVD22 BF6
RSVD23 AV5
RSVD24 AV10
RSVD25 AT8
RSVD26 AY5
RSVD27 BA2
RSVD28 AT12
RSVD29 BF3
+3VRUN
RN4
INT_PIRQA# 1 2
INT_PIRQD# 3 4
INT_PIRQB# 5 6
INT_PIRQC# 7 8
8P4R-8.2KR0402
RN5
INT_PIRQH# 1 2
INT_PIRQE# 3 4
INT_PIRQF# 5 6
INT_PIRQG# 7 8
8P4R-8.2KR0402
RN8
DGPU_SELECT# 1 2
DGPU_HOLD_RST# 3 4
DGPU_PWR_EN# 5 6
7 8
8P4R-8.2KR0402
PCI
INT_PIRQA# K40 PIRQA#
INT_PIRQB# K38 PIRQB#
INT_PIRQC# H38 PIRQC#
INT_PIRQD# G38 PIRQD#
DGPU_HOLD_RST# C46 REQ1# / GPIO50
DGPU_SELECT# C44 REQ2# / GPIO52
DGPU_PWR_EN# E40 REQ3# / GPIO54
BBS_BIT1 D47 GNT1# / GPIO51
TPJNC34 DGPU_PWM_SEL E42 GNT2# / GPIO53
GNT#3 F46 GNT3# / GPIO55
R359
X_1KR0402
R358 X_1KR0402
JNC35
26,29 ODD_MD 1 2
X_0402
INT_PIRQE# G42 PIRQE# / GPIO2
INT_PIRQF# G40 PIRQF# / GPIO3
INT_PIRQG# C42 PIRQG# / GPIO4
INT_PIRQH# D44 PIRQH# / GPIO5
TPJNC17 PCI_PME#JNC K10 PME#
PLT_RST# C6 PLTRST#
17 CLK_PCI_FB
26 CLK_PCI_KBC
26 CLK_PCIF_PORT80
R198 22R0402 CLKOUT_PCI1
R361 22R0402 CLKOUT_PCI2
R210 22R0402 CLKOUT_PCI3
H49 CLKOUT_PCI0
H43 CLKOUT_PCI1
J48 CLKOUT_PCI2
K42 CLKOUT_PCI3
H40 CLKOUT_PCI4
EC2 X_C10p50N0402
EC8 X_C10p50N0402
EC3 X_C10p50N0402
USB
USBP0N C24 USB_PN0 32
USBP0P A24 USB_PP0 32
USBP1N C25 USB_PN1 25
USBP1P B25 USB_PP1 25
USBP2N C26 USB_PN3 32
USBP2P A26 USB_PP3 32
USBP3N K28 USB_PN11 32
USBP3P H28 USB_PP11 32
USBP4N E28 USB_PN2 31
USBP4P D28 USB_PP2 31
USBP5N C28 USB_PN12 28
USBP5P A28 USB_PP12 28
USBP6N C29
USBP6P B29
USBP7N N28
USBP7P M28
USBP8N L30 USB_PN8 25
USBP8P K30 USB_PP8 25
USBP9N G30
USBP9P E30
USBP10N C30 USB_PN9 31
USBP10P A30 USB_PP9 31
USBP11N L32 USB_PN10 31
USBP11P K32 USB_PP10 31
USBP12N G32
USBP12P E32
USBP13N C32
USBP13P A32
USBRBIAS# C33 USB_BIAS
USBRBIAS B33
R340 22.6R1%0402
OC0# / GPIO59 A14
OC1# / GPIO40 K20
OC2# / GPIO41 B17
OC3# / GPIO42 C16
OC4# / GPIO43 L16
OC5# / GPIO9 A16
OC6# / GPIO10 D14
OC7# / GPIO14 C14
+3VSUS
R310 10KR0402
CougarPoint_Rev_1p0
+3VSUS
C156 C0.1u10X0402
U26B
5 3 4 2
PLT_RST#
RN6 8P4R-33R0402
1 2 3 4 5 6 7 8
BUF_PTL_RST# 3
PEG_RST# 11
+3VSUS
U26A
NC7WZ17P6X_NL_SC70-6-RH
5 1 6 2
RN7 8P4R-33R0402
1 2 3 4 5 6 7 8
USB3_RST# 25
LPC_RST# 26
WLAN_RST# 31
LAN_RST# 30

A16 swap override Strap/Top-Block Swap Override jumper	
GNT#3	Low = A16 swap override/Top-Block Swap Override enabled High = Default

Boot BIOS Strap

BBS_BIT1	BBS_BIT0	Boot BIOS Location
0	0	LPC
0	1	Reserved (NAND)
1	0	_
1	1	SPI

MSI CONFIDENTIAL 600137809 周小强 (C)201105160001 FOR RMA維修 (劉松林) ONLY

MICRO-STAR INT'L CO.,LTD.

Title
PCH_PCI/USB/NVRAM

Size Custom
Document Number **MS-1482**
Rev 0A

Date: Friday, October 29, 2010
Sheet 20 of 44

GPIO0 & 6 & 16 & 22 & 34 & 38 & 48 --If not used,require pull up 3VRUN
GPIO57 --If not used,require pull up 3VSUS
GPIO15--High is support TLS,internal pull-down
GPIO27 is deep S4 & S5 weak up event,internal pull high.& It's VCCFDIPLL internal VRM strapping pin
GPIO35 --Define to EDID Select (If not used,require pull down)

COUGAR POINT (GPIO,VSS_NCTF,RSVD)

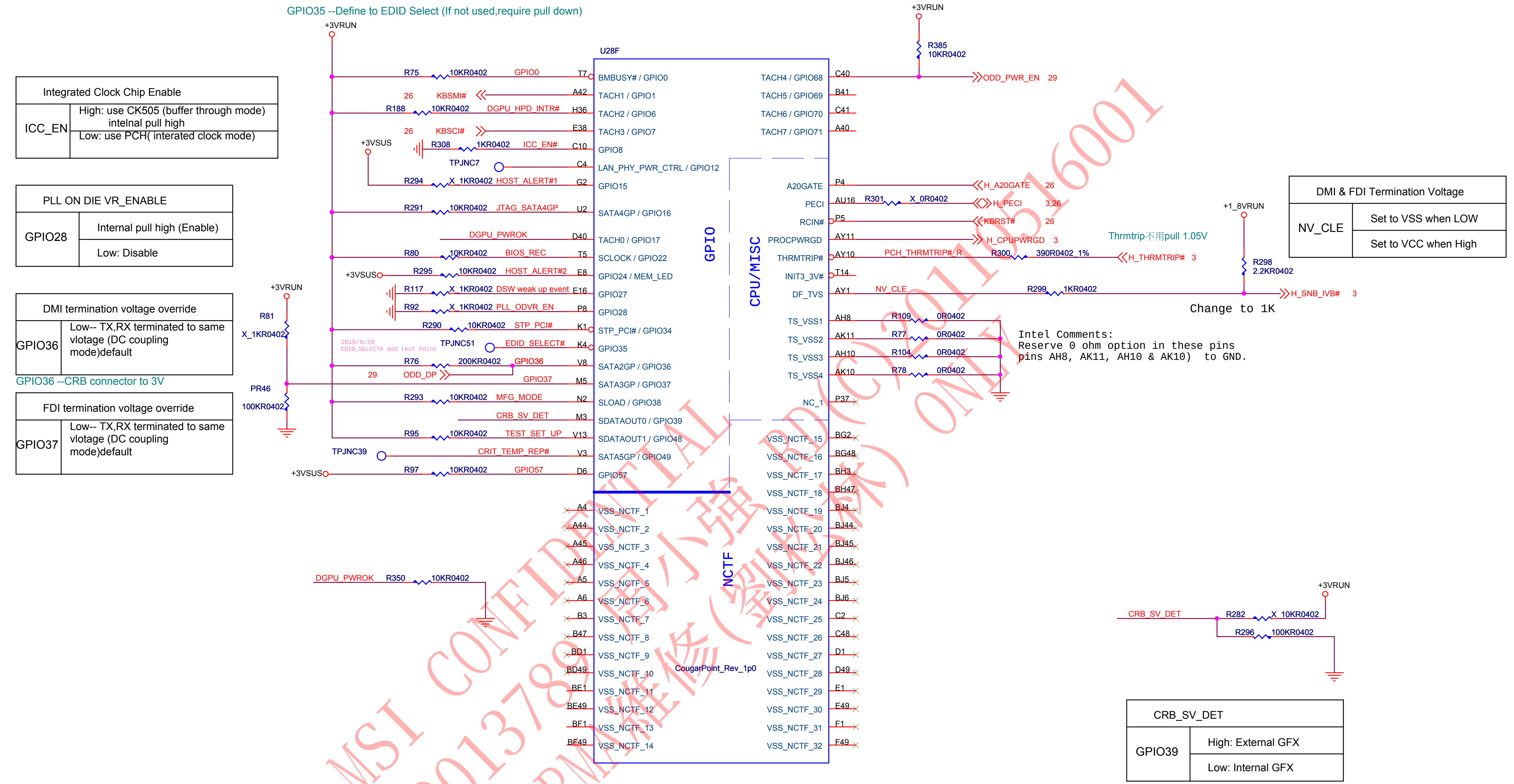

+3VRUN
U28F
R75 10KR0402 GPIO0 T7 BMBUSY# / GPIO0
26 KBSMI# A42 TACH1 / GPIO1
R188 10KR0402 DGPU_HPD_INTR# H36 TACH2 / GPIO6
26 KBSCI# E38 TACH3 / GPIO7
+3VSUS R308 1KR0402 ICC_EN# C10 GPIO8
TPJNC7 C4 LAN_PHY_PWR_CTRL / GPIO12
R294 X_1KR0402 HOST_ALERT#1 G2 GPIO15
R291 10KR0402 JTAG_SATA4GP U2 SATA4GP / GPIO16
DGPU_PWROK D40 TACH0 / GPIO17
R80 10KR0402 BIOS_REC T5 SCLOCK / GPIO22
+3VSUS R295 10KR0402 HOST_ALERT#2 E8 GPIO24 / MEM_LED
R117 X_1KR0402 DSW weak up event E16 GPIO27
R92 X_1KR0402 PLL_ODVR_EN P8 GPIO28
R290 10KR0402 STP_PCI# K1 STP_PCI# / GPIO34
2010/6/29 EDID_SELECT# add test Point
TPJNC51 EDID_SELECT# K4 GPIO35
R76 200KR0402 GPIO36 V8 SATA2GP / GPIO36
29 ODD_DP GPIO37 M5 SATA3GP / GPIO37
R293 10KR0402 MFG_MODE N2 SLOAD / GPIO38
CRB_SV_DET M3 SDATAOUT0 / GPIO39
R95 10KR0402 TEST_SET_UP V13 SDATAOUT1 / GPIO48
TPJNC39 CRIT_TEMP_REP# V3 SATA5GP / GPIO49
+3VSUS R97 10KR0402 GPIO57 D6 GPIO57
+3VRUN R81 X_1KR0402
PR46 100KR0402
GPIO
CPU/MISC
NCTF
TACH4 / GPIO68 C40
TACH5 / GPIO69 B41
TACH6 / GPIO70 C41
TACH7 / GPIO71 A40
+3VRUN R385 10KR0402
ODD_PWR_EN 29
A20GATE P4 H_A20GATE 26
PECI AU16 R301 X_0R0402 H_PECI 3,26
RCIN# P5 KBRST# 26
PROCPWRGD AY11 H_CPUPWRGD 3
THRMTRIP# AY10 PCH_THRMTRIP#_R R300 390R0402_1% H_THRMTRIP# 3
Thrmtrip不用pull 1.05V
INIT3_3V# T14
DF_TVS AY1 NV_CLE R299 1KR0402 H_SNB_IVB# 3
+1_8VRUN R298 2.2KR0402
Change to 1K
TS_VSS1 AH8 R109 0R0402
TS_VSS2 AK11 R77 0R0402
TS_VSS3 AH10 R104 0R0402
TS_VSS4 AK10 R78 0R0402
Intel Comments:
Reserve 0 ohm option in these pins
pins AH8, AK11, AH10 & AK10) to GND.
NC_1 P37
A4 VSS_NCTF_1
A44 VSS_NCTF_2
A45 VSS_NCTF_3
A46 VSS_NCTF_4
A5 VSS_NCTF_5
A6 VSS_NCTF_6
B3 VSS_NCTF_7
B47 VSS_NCTF_8
BD1 VSS_NCTF_9
BD49 VSS_NCTF_10
BE1 VSS_NCTF_11
BE49 VSS_NCTF_12
BF1 VSS_NCTF_13
BF49 VSS_NCTF_14
VSS_NCTF_15 BG2
VSS_NCTF_16 BG48
VSS_NCTF_17 BH3
VSS_NCTF_18 BH47
VSS_NCTF_19 BJ4
VSS_NCTF_20 BJ44
VSS_NCTF_21 BJ45
VSS_NCTF_22 BJ46
VSS_NCTF_23 BJ5
VSS_NCTF_24 BJ6
VSS_NCTF_25 C2
VSS_NCTF_26 C48
VSS_NCTF_27 D1
VSS_NCTF_28 D49
VSS_NCTF_29 E1
VSS_NCTF_30 E49
VSS_NCTF_31 F1
VSS_NCTF_32 F49
CougarPoint_Rev_1p0
DGPU_PWROK R350 10KR0402
+3VRUN CRB_SV_DET R282 X_10KR0402
R296 100KR0402

Integrated Clock Chip Enable	
ICC_EN	High: use CK505 (buffer through mode) intelnal pull high
	Low: use PCH(interated clock mode)

PLL ON DIE VR_ENABLE	
GPIO28	Internal pull high (Enable)
	Low: Disable

DMI termination voltage override	
GPIO36	Low-- TX,RX terminated to same vlotage (DC coupling mode)default

GPIO36 --CRB connector to 3V

FDI termination voltage override	
GPIO37	Low-- TX,RX terminated to same vlotage (DC coupling mode)default

DMI & FDI Termination Voltage	
NV_CLE	Set to VSS when LOW
	Set to VCC when High

CRB_SV_DET	
GPIO39	High: External GFX
	Low: Internal GFX

MSI CONFIDENTIAL
600137897 周小强 RD(C)2011516001
FOR RMA维修(刘宗林) ONLY

MICRO-STAR INT'L CO.,LTD.
Title
PCH_GPIO/NCTF/RSVD
Size Custom
Document Number MS-1482
Rev 0A
Date: Friday, October 29, 2010
Sheet 21 of 44

COUGAR POINT (POWER)

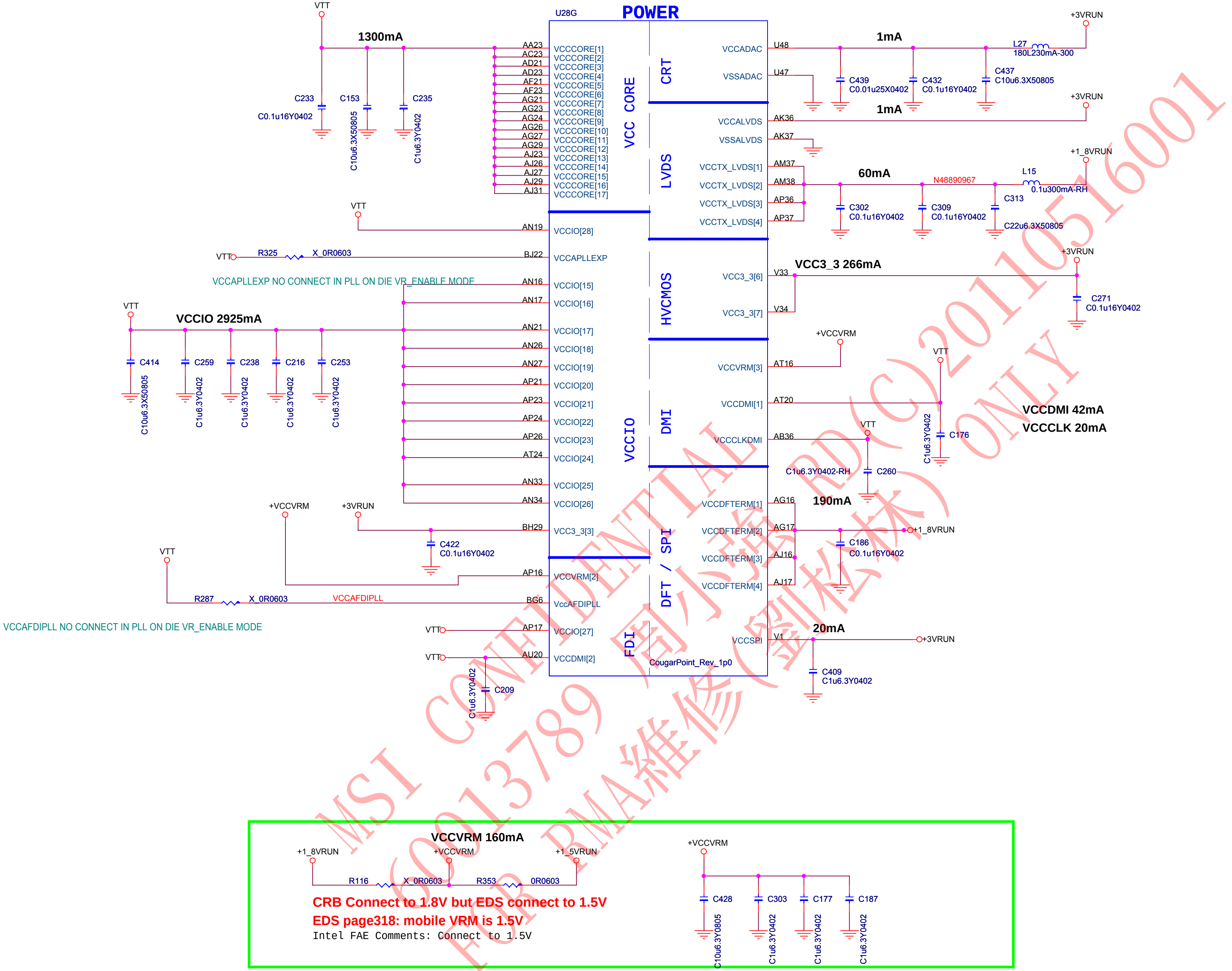

U28G
POWER
VCC CORE
CRT
LVDS
HVCMOS
DMI
VCCIO
DFT / SPI
FDI
CougarPoint_Rev_1p0
VTT
1300mA
C233
C0.1u16Y0402
C153
C10u6.3X50805
C235
C1u6.3Y0402
AA23 VCCCORE[1]
AC23 VCCCORE[2]
AD21 VCCCORE[3]
AD23 VCCCORE[4]
AF21 VCCCORE[5]
AF23 VCCCORE[6]
AG21 VCCCORE[7]
AG23 VCCCORE[8]
AG24 VCCCORE[9]
AG26 VCCCORE[10]
AG27 VCCCORE[11]
AG29 VCCCORE[12]
AJ23 VCCCORE[13]
AJ26 VCCCORE[14]
AJ27 VCCCORE[15]
AJ29 VCCCORE[16]
AJ31 VCCCORE[17]
AN19 VCCIO[28]
R325 X_0R0603
BJ22 VCCAPLLEXP
VCCAPLLEXP NO CONNECT IN PLL ON DIE VR_ENABLE MODE
AN16 VCCIO[15]
AN17 VCCIO[16]
VCCIO 2925mA
AN21 VCCIO[17]
AN26 VCCIO[18]
AN27 VCCIO[19]
AP21 VCCIO[20]
AP23 VCCIO[21]
AP24 VCCIO[22]
AP26 VCCIO[23]
AT24 VCCIO[24]
AN33 VCCIO[25]
AN34 VCCIO[26]
C414 C10u6.3X50805
C259 C1u6.3Y0402
C238 C1u6.3Y0402
C216 C1u6.3Y0402
C253 C1u6.3Y0402
+VCCVRM
+3VRUN
BH29 VCC3_3[3]
C422 C0.1u16Y0402
AP16 VCCVRM[2]
R287 X_0R0603
VCCAFDIPLL
BG6 VccAFDIPLL
VCCAFDIPLL NO CONNECT IN PLL ON DIE VR_ENABLE MODE
AP17 VCCIO[27]
AU20 VCCDMI[2]
C209 C1u6.3Y0402
VCCADAC U48
1mA
L27 180L230mA-300
C439 C0.01u25X0402
C432 C0.1u16Y0402
C437 C10u6.3X50805
VSSADAC U47
1mA
VCCALVDS AK36
VSSALVDS AK37
+1_8VRUN
VCCTX_LVDS[1] AM37
VCCTX_LVDS[2] AM38
VCCTX_LVDS[3] AP36
VCCTX_LVDS[4] AP37
60mA
N48890967
L15 0.1u300mA-RH
C302 C0.1u16Y0402
C309 C0.1u16Y0402
C313 C22u6.3X50805
VCC3_3 266mA
VCC3_3[6] V33
VCC3_3[7] V34
C271 C0.1u16Y0402
VCCVRM[3] AT16
VCCDMI[1] AT20
VCCCLKDMI AB36
C176 C1u6.3Y0402
C260 C1u6.3Y0402-RH
VCCDMI 42mA
VCCCLK 20mA
190mA
VCCDFTERM[1] AG16
VCCDFTERM[2] AG17
VCCDFTERM[3] AJ16
VCCDFTERM[4] AJ17
C186 C0.1u16Y0402
20mA
VCCSPI V1
C409 C1u6.3Y0402
VCCVRM 160mA
+1_8VRUN
+VCCVRM
+1_5VRUN
R116 X_0R0603
R353 0R0603
C428 C10u6.3Y0805
C303 C1u6.3Y0402
C177 C1u6.3Y0402
C187 C1u6.3Y0402

CRB Connect to 1.8V but EDS connect to 1.5V

EDS page318: mobile VRM is 1.5V

Intel FAE Comments: Connect to 1.5V

MSI CONFIDENTIAL 60013789 周小莲 RD(C)20110516001 FOR RMA維修(劉松林) ONLY

MICRO-STAR INT'L CO.,LTD.

Title	PCH_POWER	
Size Custom	Document Number MS-1482	Rev 0A
Date: Friday, October 29, 2010	Sheet 22 of 44	

COUGAR POINT (POWER)

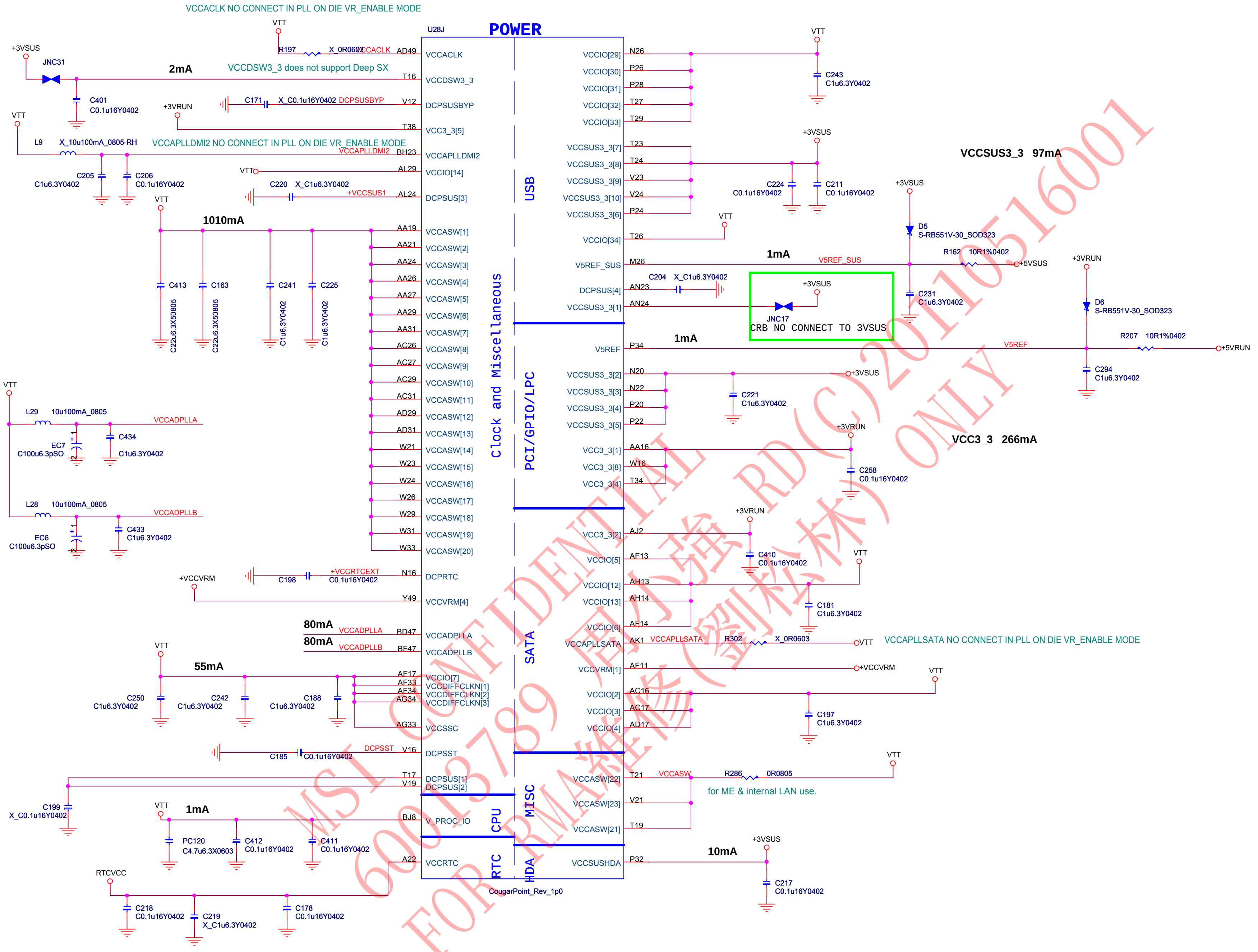
VCCACLK NO CONNECT IN PLL ON DIE VR_ENABLE MODE
U28J
POWER
VTT
R197 X_0R0603 VCCACLK AD49 VCCACLK
+3VSUS
JNC31
2mA
VCCDSW3_3 does not support Deep SX
T16 VCCDSW3_3
C401 C0.1u16Y0402
+3VRUN
C171 X_C0.1u16Y0402 DCPSUSBYP V12 DCPSUSBYP
T38 VCC3_3[5]
L9 X_10u100mA_0805-RH
VCCAPLLDMI2 NO CONNECT IN PLL ON DIE VR_ENABLE MODE
VCCAPLLDMI2 BH23 VCCAPLLDMI2
C205 C1u6.3Y0402
C206 C0.1u16Y0402
VTT AL29 VCCIO[14]
C220 X_C1u6.3Y0402 +VCCSUS1 AL24 DCPSUS[3]
1010mA
AA19 VCCASW[1]
AA21 VCCASW[2]
AA24 VCCASW[3]
AA26 VCCASW[4]
AA27 VCCASW[5]
AA29 VCCASW[6]
AA31 VCCASW[7]
AC26 VCCASW[8]
AC27 VCCASW[9]
AC29 VCCASW[10]
AC31 VCCASW[11]
AD29 VCCASW[12]
AD31 VCCASW[13]
W21 VCCASW[14]
W23 VCCASW[15]
W24 VCCASW[16]
W26 VCCASW[17]
W29 VCCASW[18]
W31 VCCASW[19]
W33 VCCASW[20]
C413 C22u6.3X50805
C163 C22u6.3X50805
C241 C1u6.3Y0402
C225 C1u6.3Y0402
Clock and Miscellaneous
USB
PCI/GPIO/LPC
SATA
MISC
CPU
RTC
HDA
L29 10u100mA_0805 VCCADPLLA
EC7 C100u6.3pSO
C434 C1u6.3Y0402
L28 10u100mA_0805 VCCADPLLB
EC6 C100u6.3pSO
C433 C1u6.3Y0402
+VCCVRM
C198 +VCCRTCEXT C0.1u16Y0402 N16 DCPRTC
Y49 VCCVRM[4]
80mA VCCADPLLA BD47 VCCADPLLA
80mA VCCADPLLB BF47 VCCADPLLB
55mA
AF17 VCCIO[7]
AF33 VCCDIFFCLKN[1]
AF34 VCCDIFFCLKN[2]
AG34 VCCDIFFCLKN[3]
AG33 VCCSSC
C250 C1u6.3Y0402
C242 C1u6.3Y0402
C188 C1u6.3Y0402
C185 C0.1u16Y0402 DCPSST V16 DCPSST
T17 DCPSUS[1]
V19 DCPSUS[2]
C199 X_C0.1u16Y0402
1mA
BJ8 V_PROC_IO
PC120 C4.7u6.3X0603
C412 C0.1u16Y0402
C411 C0.1u16Y0402
A22 VCCRTC
RTCVCC
C218 C0.1u16Y0402
C219 X_C1u6.3Y0402
C178 C0.1u16Y0402
CougarPoint_Rev_1p0
N26 VCCIO[29]
P26 VCCIO[30]
P28 VCCIO[31]
T27 VCCIO[32]
T29 VCCIO[33]
C243 C1u6.3Y0402
T23 VCCSUS3_3[7]
T24 VCCSUS3_3[8]
V23 VCCSUS3_3[9]
V24 VCCSUS3_3[10]
P24 VCCSUS3_3[6]
C224 C0.1u16Y0402
C211 C0.1u16Y0402
VCCSUS3_3 97mA
T26 VCCIO[34]
D5 S-RB551V-30_SOD323
R162 10R1%0402 +5VSUS
1mA
M26 V5REF_SUS V5REF_SUS
C231 C1u6.3Y0402
C204 X_C1u6.3Y0402 AN23 DCPSUS[4]
AN24 VCCSUS3_3[1]
JNC17
CRB NO CONNECT TO 3VSUS
D6 S-RB551V-30_SOD323
R207 10R1%0402 +5VRUN
P34 V5REF V5REF
C294 C1u6.3Y0402
N20 VCCSUS3_3[2]
N22 VCCSUS3_3[3]
P20 VCCSUS3_3[4]
P22 VCCSUS3_3[5]
C221 C1u6.3Y0402
AA16 VCC3_3[1]
W16 VCC3_3[8]
T34 VCC3_3[4]
C258 C0.1u16Y0402
VCC3_3 266mA
AJ2 VCC3_3[2]
AF13 VCCIO[5]
C410 C0.1u16Y0402
AH13 VCCIO[12]
AH14 VCCIO[13]
C181 C1u6.3Y0402
AF14 VCCIO[6]
AK1 VCCAPLLSATA VCCAPLLSATA
R302 X_0R0603
VCCAPLLSATA NO CONNECT IN PLL ON DIE VR_ENABLE MODE
AF11 VCCVRM[1] +VCCVRM
AC16 VCCIO[2]
AC17 VCCIO[3]
AD17 VCCIO[4]
C197 C1u6.3Y0402
T21 VCCASW[22] VCCASW
R286 0R0805
for ME & internal LAN use.
V21 VCCASW[23]
T19 VCCASW[21]
P32 VCCSUSHDA
10mA
C217 C0.1u16Y0402

MSI CONFIDENTIAL 600013789 周小莲 RD(C)20110516001 FOR RMA維修(劉松林) ONLY

MICRO-STAR INT'L CO.,LTD.

Title
PCH_POWER2

Size Custom
Document Number
MS-1482
Rev
0A

Date: Friday, October 29, 2010
Sheet 23 of 44

Cougar Point (GND)

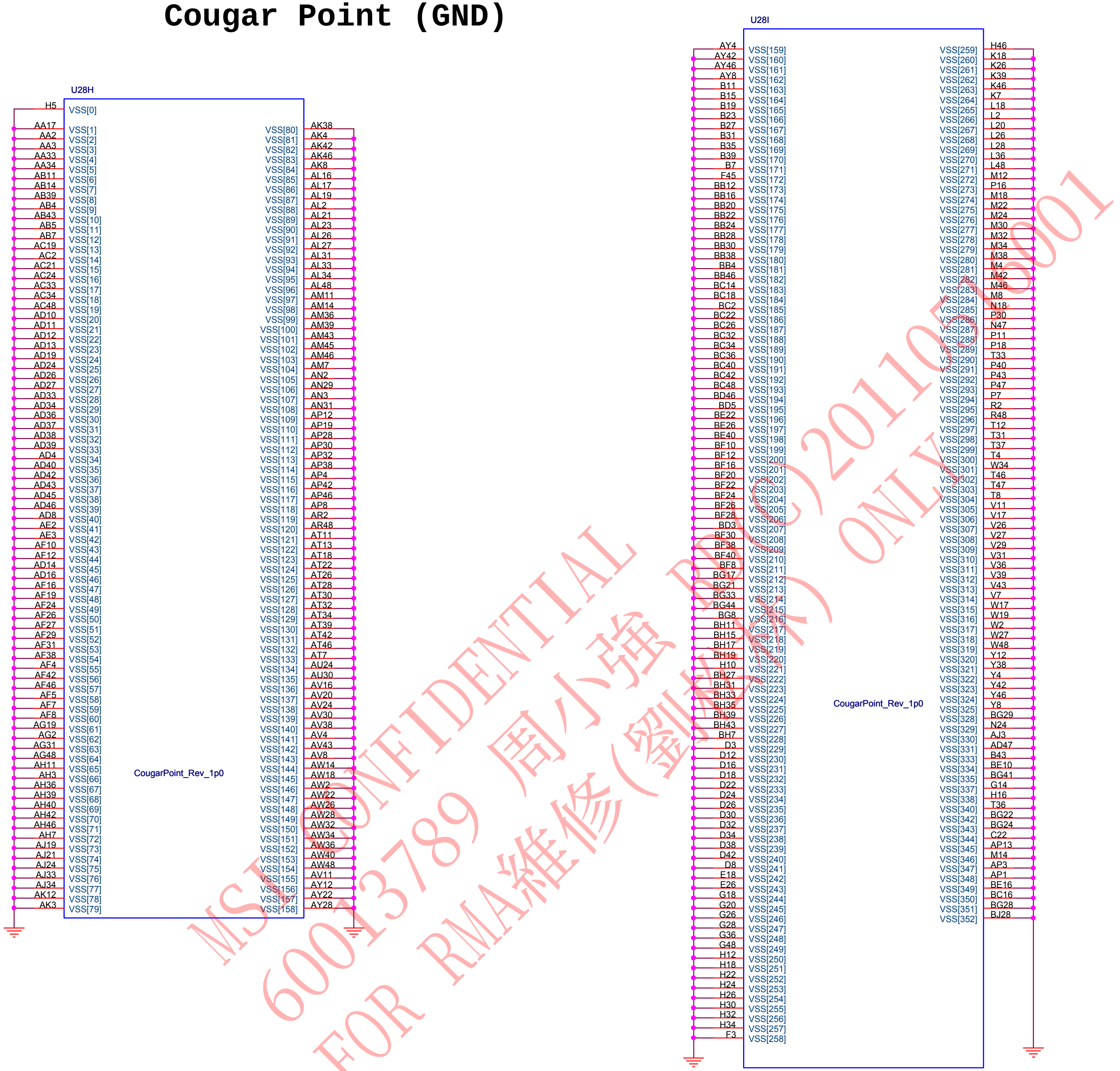
U28H
CougarPoint_Rev_1p0
H5 VSS[0]
AA17 VSS[1]
AA2 VSS[2]
AA3 VSS[3]
AA33 VSS[4]
AA34 VSS[5]
AB11 VSS[6]
AB14 VSS[7]
AB39 VSS[8]
AB4 VSS[9]
AB43 VSS[10]
AB5 VSS[11]
AB7 VSS[12]
AC19 VSS[13]
AC2 VSS[14]
AC21 VSS[15]
AC24 VSS[16]
AC33 VSS[17]
AC34 VSS[18]
AC48 VSS[19]
AD10 VSS[20]
AD11 VSS[21]
AD12 VSS[22]
AD13 VSS[23]
AD19 VSS[24]
AD24 VSS[25]
AD26 VSS[26]
AD27 VSS[27]
AD33 VSS[28]
AD34 VSS[29]
AD36 VSS[30]
AD37 VSS[31]
AD38 VSS[32]
AD39 VSS[33]
AD4 VSS[34]
AD40 VSS[35]
AD42 VSS[36]
AD43 VSS[37]
AD45 VSS[38]
AD46 VSS[39]
AD8 VSS[40]
AE2 VSS[41]
AE3 VSS[42]
AF10 VSS[43]
AF12 VSS[44]
AD14 VSS[45]
AD16 VSS[46]
AF16 VSS[47]
AF19 VSS[48]
AF24 VSS[49]
AF26 VSS[50]
AF27 VSS[51]
AF29 VSS[52]
AF31 VSS[53]
AF38 VSS[54]
AF4 VSS[55]
AF42 VSS[56]
AF46 VSS[57]
AF5 VSS[58]
AF7 VSS[59]
AF8 VSS[60]
AG19 VSS[61]
AG2 VSS[62]
AG31 VSS[63]
AG48 VSS[64]
AH11 VSS[65]
AH3 VSS[66]
AH36 VSS[67]
AH39 VSS[68]
AH40 VSS[69]
AH42 VSS[70]
AH46 VSS[71]
AH7 VSS[72]
AJ19 VSS[73]
AJ21 VSS[74]
AJ24 VSS[75]
AJ33 VSS[76]
AJ34 VSS[77]
AK12 VSS[78]
AK3 VSS[79]
VSS[80] AK38
VSS[81] AK4
VSS[82] AK42
VSS[83] AK46
VSS[84] AK8
VSS[85] AL16
VSS[86] AL17
VSS[87] AL19
VSS[88] AL2
VSS[89] AL21
VSS[90] AL23
VSS[91] AL26
VSS[92] AL27
VSS[93] AL31
VSS[94] AL33
VSS[95] AL34
VSS[96] AL48
VSS[97] AM11
VSS[98] AM14
VSS[99] AM36
VSS[100] AM39
VSS[101] AM43
VSS[102] AM45
VSS[103] AM46
VSS[104] AM7
VSS[105] AN2
VSS[106] AN29
VSS[107] AN3
VSS[108] AN31
VSS[109] AP12
VSS[110] AP19
VSS[111] AP28
VSS[112] AP30
VSS[113] AP32
VSS[114] AP38
VSS[115] AP4
VSS[116] AP42
VSS[117] AP46
VSS[118] AP8
VSS[119] AR2
VSS[120] AR48
VSS[121] AT11
VSS[122] AT13
VSS[123] AT18
VSS[124] AT22
VSS[125] AT26
VSS[126] AT28
VSS[127] AT30
VSS[128] AT32
VSS[129] AT34
VSS[130] AT39
VSS[131] AT42
VSS[132] AT46
VSS[133] AT7
VSS[134] AU24
VSS[135] AU30
VSS[136] AV16
VSS[137] AV20
VSS[138] AV24
VSS[139] AV30
VSS[140] AV38
VSS[141] AV4
VSS[142] AV43
VSS[143] AV8
VSS[144] AW14
VSS[145] AW18
VSS[146] AW2
VSS[147] AW22
VSS[148] AW26
VSS[149] AW28
VSS[150] AW32
VSS[151] AW34
VSS[152] AW36
VSS[153] AW40
VSS[154] AW48
VSS[155] AV11
VSS[156] AY12
VSS[157] AY22
VSS[158] AY28
U28I
CougarPoint_Rev_1p0
AY4 VSS[159]
AY42 VSS[160]
AY46 VSS[161]
AY8 VSS[162]
B11 VSS[163]
B15 VSS[164]
B19 VSS[165]
B23 VSS[166]
B27 VSS[167]
B31 VSS[168]
B35 VSS[169]
B39 VSS[170]
B7 VSS[171]
F45 VSS[172]
BB12 VSS[173]
BB16 VSS[174]
BB20 VSS[175]
BB22 VSS[176]
BB24 VSS[177]
BB28 VSS[178]
BB30 VSS[179]
BB38 VSS[180]
BB4 VSS[181]
BB46 VSS[182]
BC14 VSS[183]
BC18 VSS[184]
BC2 VSS[185]
BC22 VSS[186]
BC26 VSS[187]
BC32 VSS[188]
BC34 VSS[189]
BC36 VSS[190]
BC40 VSS[191]
BC42 VSS[192]
BC48 VSS[193]
BD46 VSS[194]
BD5 VSS[195]
BE22 VSS[196]
BE26 VSS[197]
BE40 VSS[198]
BF10 VSS[199]
BF12 VSS[200]
BF16 VSS[201]
BF20 VSS[202]
BF22 VSS[203]
BF24 VSS[204]
BF26 VSS[205]
BF28 VSS[206]
BD3 VSS[207]
BF30 VSS[208]
BF38 VSS[209]
BF40 VSS[210]
BF8 VSS[211]
BG17 VSS[212]
BG21 VSS[213]
BG33 VSS[214]
BG44 VSS[215]
BG8 VSS[216]
BH11 VSS[217]
BH15 VSS[218]
BH17 VSS[219]
BH19 VSS[220]
H10 VSS[221]
BH27 VSS[222]
BH31 VSS[223]
BH33 VSS[224]
BH35 VSS[225]
BH39 VSS[226]
BH43 VSS[227]
BH7 VSS[228]
D3 VSS[229]
D12 VSS[230]
D16 VSS[231]
D18 VSS[232]
D22 VSS[233]
D24 VSS[234]
D26 VSS[235]
D30 VSS[236]
D32 VSS[237]
D34 VSS[238]
D38 VSS[239]
D42 VSS[240]
D8 VSS[241]
E18 VSS[242]
E26 VSS[243]
G18 VSS[244]
G20 VSS[245]
G26 VSS[246]
G28 VSS[247]
G36 VSS[248]
G48 VSS[249]
H12 VSS[250]
H18 VSS[251]
H22 VSS[252]
H24 VSS[253]
H26 VSS[254]
H30 VSS[255]
H32 VSS[256]
H34 VSS[257]
F3 VSS[258]
VSS[259] H46
VSS[260] K18
VSS[261] K26
VSS[262] K39
VSS[263] K46
VSS[264] K7
VSS[265] L18
VSS[266] L2
VSS[267] L20
VSS[268] L26
VSS[269] L28
VSS[270] L36
VSS[271] L48
VSS[272] M12
VSS[273] P16
VSS[274] M18
VSS[275] M22
VSS[276] M24
VSS[277] M30
VSS[278] M32
VSS[279] M34
VSS[280] M38
VSS[281] M4
VSS[282] M42
VSS[283] M46
VSS[284] M8
VSS[285] N18
VSS[286] P30
VSS[287] N47
VSS[288] P11
VSS[289] P18
VSS[290] T33
VSS[291] P40
VSS[292] P43
VSS[293] P47
VSS[294] P7
VSS[295] R2
VSS[296] R48
VSS[297] T12
VSS[298] T31
VSS[299] T37
VSS[300] T4
VSS[301] W34
VSS[302] T46
VSS[303] T47
VSS[304] T8
VSS[305] V11
VSS[306] V17
VSS[307] V26
VSS[308] V27
VSS[309] V29
VSS[310] V31
VSS[311] V36
VSS[312] V39
VSS[313] V43
VSS[314] V7
VSS[315] W17
VSS[316] W19
VSS[317] W2
VSS[318] W27
VSS[319] W48
VSS[320] Y12
VSS[321] Y38
VSS[322] Y4
VSS[323] Y42
VSS[324] Y46
VSS[325] Y8
VSS[328] BG29
VSS[329] N24
VSS[330] AJ3
VSS[331] AD47
VSS[333] B43
VSS[334] BE10
VSS[335] BG41
VSS[337] G14
VSS[338] H16
VSS[340] T36
VSS[342] BG22
VSS[343] BG24
VSS[344] C22
VSS[345] AP13
VSS[346] M14
VSS[347] AP3
VSS[348] AP1
VSS[349] BE16
VSS[350] BC16
VSS[351] BG28
VSS[352] BJ28

MSI CONFIDENTIAL
60013789 周小強 RD(C)20110510001
FOR RMA維修(劉煥文) ONLY

MICRO-STAR INT'L CO.,LTD.

Title	**PCH_GND**	
Size Custom	Document Number **MS-1482**	Rev 0A
Date:	Friday, October 29, 2010	Sheet 24 of 44

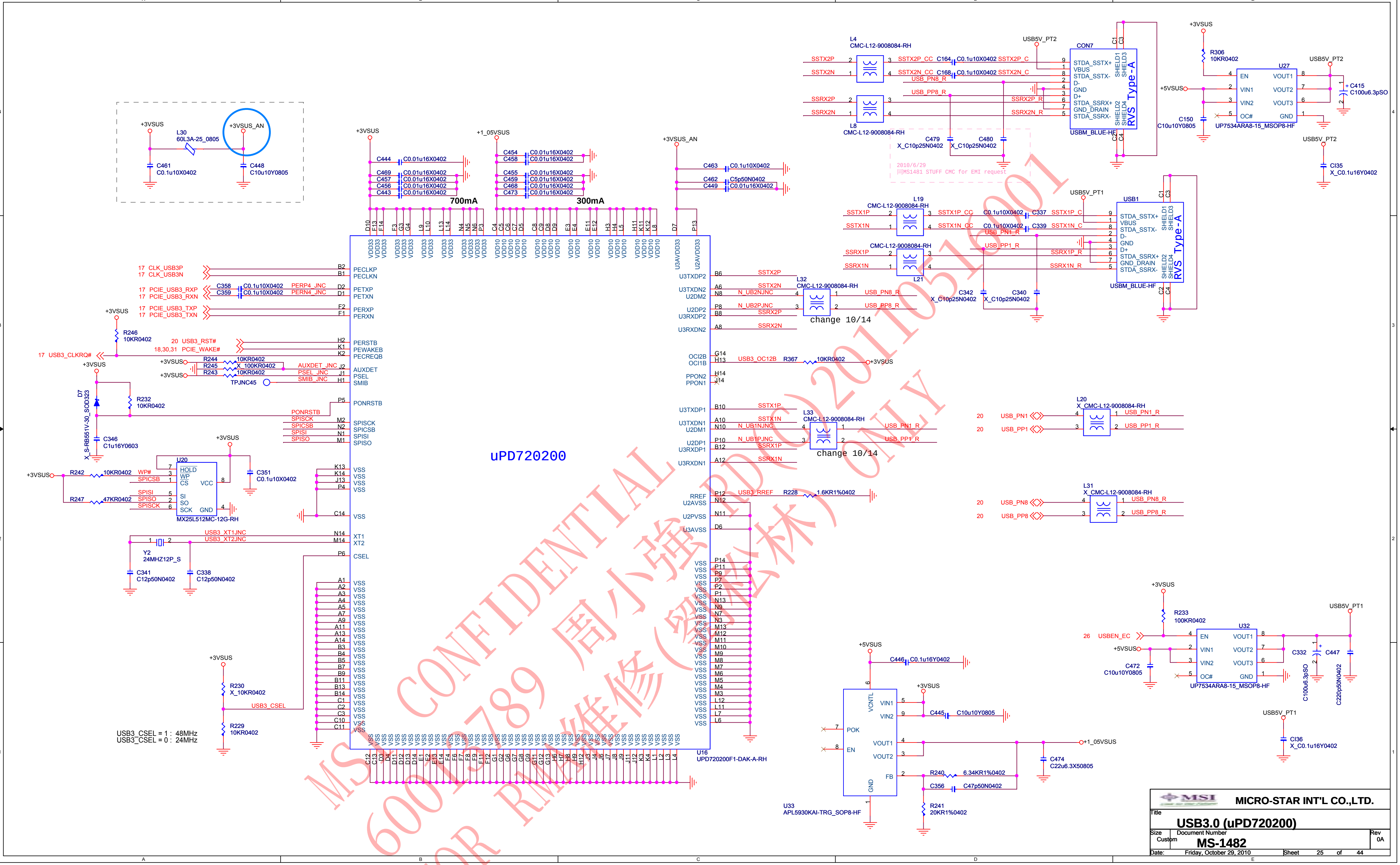
uPD720200
U16
UPD720200F1-DAK-A-RH
700mA
300mA
+3VSUS
+1_05VSUS
+3VSUS_AN
+5VSUS
USB5V_PT1
USB5V_PT2
L30
60L3A-25_0805
C461
C0.1u10X0402
C448
C10u10Y0805
17 CLK_USB3P
17 CLK_USB3N
17 PCIE_USB3_RXP
17 PCIE_USB3_RXN
17 PCIE_USB3_TXP
17 PCIE_USB3_TXN
20 USB3_RST#
18,30,31 PCIE_WAKE#
17 USB3_CLKRQ#
PECLKP
PECLKN
PETXP
PETXN
PERXP
PERXN
PERSTB
PEWAKEB
PECREQB
AUXDET
PSEL
SMIB
PONRSTB
SPISCK
SPICSB
SPISI
SPISO
XT1
XT2
CSEL
RREF
U2AVSS
U2PVSS
U3AVSS
U3TXDP2
U3TXDN2
U2DM2
U2DP2
U3RXDP2
U3RXDN2
OCI2B
OCI1B
PPON2
PPON1
U3TXDP1
U3TXDN1
U2DM1
U2DP1
U3RXDP1
U3RXDN1
VSS
VDD33
VDD10
U3AVDD33
U2AVDD33
R246
10KR0402
R244
10KR0402
R245
X_100KR0402
R243
10KR0402
TPJNC45
AUXDET_JNC
PSEL_JNC
SMIB_JNC
D7
X_S-RB551V-30_SOD323
R232
10KR0402
C346
C1u16Y0603
PONRSTB
U20
MX25L512MC-12G-RH
HOLD
WP
CS
SI
SO
SCK
VCC
GND
R242
10KR0402
R247
47KR0402
WP#
C351
C0.1u10X0402
Y2
24MHZ12P_S
C341
C12p50N0402
C338
C12p50N0402
USB3_XT1JNC
USB3_XT2JNC
R230
X_10KR0402
R229
10KR0402
USB3_CSEL
USB3_CSEL = 1 : 48MHz
USB3_CSEL = 0 : 24MHz
C444
C0.01u16X0402
C469
C457
C456
C443
C454
C458
C455
C459
C468
C473
C463
C0.1u10X0402
C462
C5p50N0402
C449
C0.01u16X0402
C358
C359
PERP4_JNC
PERN4_JNC
USB3_OC12B
R367
10KR0402
USB3_RREF
R228
1.6KR1%0402
L4
CMC-L12-9008084-RH
L8
CMC-L12-9008084-RH
CON7
RVS_Type-A
USBM_BLUE-HF
STDA_SSTX+
VBUS
STDA_SSTX-
D-
GND
D+
STDA_SSRX+
GND_DRAIN
STDA_SSRX-
SHIELD1
SHIELD2
SHIELD3
SHIELD4
SSTX2P
SSTX2N
SSRX2P
SSRX2N
SSTX2P_CC
SSTX2N_CC
C164
C168
C0.1u10X0402
USB_PN8_R
USB_PP8_R
C479
X_C10p25N0402
C480
X_C10p25N0402
2010/6/29
同MS1481 STUFF CMC for EMI request
U27
UP7534ARA8-15_MSOP8-HF
EN
VIN1
VIN2
OC#
VOUT1
VOUT2
VOUT3
R306
10KR0402
C150
C10u10Y0805
C415
C100u6.3pSO
C135
X_C0.1u16Y0402
L19
CMC-L12-9008084-RH
L21
USB1
SSTX1P
SSTX1N
SSRX1P
SSRX1N
SSTX1P_CC
SSTX1N_CC
C337
C339
USB_PN1_R
USB_PP1_R
C342
X_C10p25N0402
C340
X_C10p25N0402
L32
CMC-L12-9008084-RH
N_UB2NJNC
N_UB2PJNC
USB_PN8_R
USB_PP8_R
change 10/14
L33
CMC-L12-9008084-RH
N_UB1NJNC
N_UB1PJNC
USB_PN1_R
USB_PP1_R
change 10/14
L20
X_CMC-L12-9008084-RH
20 USB_PN1
20 USB_PP1
L31
X_CMC-L12-9008084-RH
20 USB_PN8
20 USB_PP8
U32
UP7534ARA8-15_MSOP8-HF
R233
100KR0402
26 USBEN_EC
C472
C10u10Y0805
C332
C100u6.3pSO
C447
C220p50N0402
C136
X_C0.1u16Y0402
U33
APL5930KAI-TRG_SOP8-HF
VCNTL
VIN1
VIN2
POK
EN
VOUT1
VOUT2
FB
GND
C446
C0.1u16Y0402
C445
C10u10Y0805
C474
C22u6.3X50805
R240
6.34KR1%0402
C356
C47p50N0402
R241
20KR1%0402

MICRO-STAR INT'L CO.,LTD.

Title
USB3.0 (uPD720200)

Size	Document Number	Rev
Custom	MS-1482	0A

Date: Friday, October 29, 2010 Sheet 25 of 44

MSI CONFIDENTIAL
600123789 周小強 RD(C) 20110516001
FOR RMA维修(劉松林) ONLY

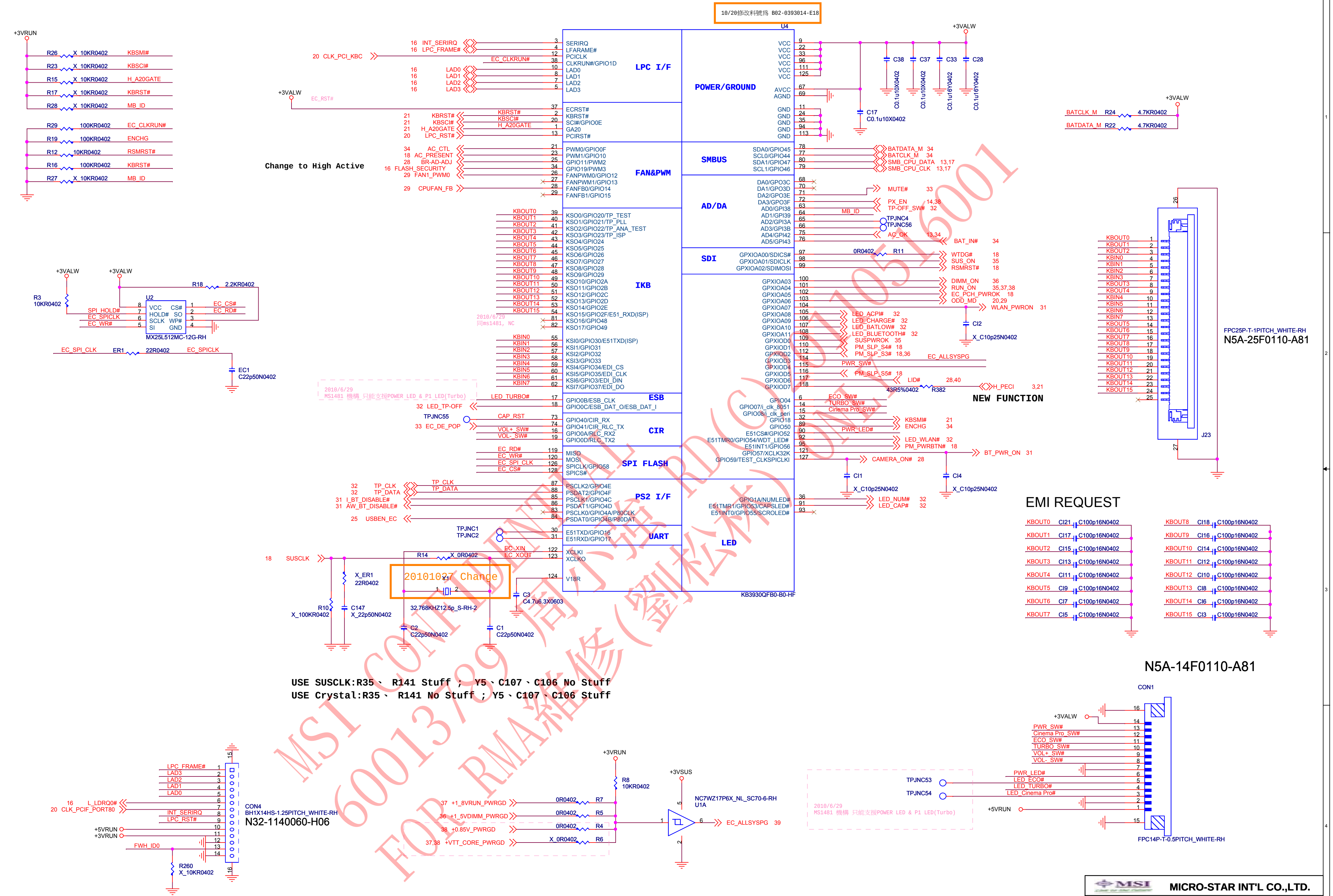
10/20修改料號爲 B02-0393014-E18
U4
KB3930QFB0-B0-HF
LPC I/F
POWER/GROUND
FAN&PWM
SMBUS
AD/DA
SDI
IKB
ESB
CIR
SPI FLASH
PS2 I/F
UART
LED
SERIRQ
LFRAME#
PCICLK
CLKRUN#/GPIO1D
LAD0
LAD1
LAD2
LAD3
ECRST#
KBRST#
SCI#/GPIO0E
GA20
PCIRST#
VCC
AVCC
AGND
GND
+3VALW
+3VRUN
+3VSUS
+5VRUN
C38
C37
C33
C28
C0.1u10X0402
C0.1u16Y0402
C17
C0.1u10X0402
BATCLK_M
BATDATA_M
R24
R22
4.7KR0402
INT_SERIRQ
LPC_FRAME#
CLK_PCI_KBC
EC_CLKRUN#
EC_RST#
KBSMI#
KBSCI#
H_A20GATE
KBRST#
MB_ID
ENCHG
RSMRST#
R26
R23
R15
R17
R28
R29
R19
R12
R16
R27
X_10KR0402
100KR0402
10KR0402
AC_CTL
AC_PRESENT
BR-ADJ-ADJ
FLASH_SECURITY
FAN1_PWM0
CPUFAN_FB
SMB_CPU_DATA
SMB_CPU_CLK
MUTE#
PX_EN
TP-OFF_SW#
MB_ID
TPJNC4
TPJNC56
AC_OK
BAT_IN#
R11
0R0402
WTDG#
SUS_ON
RSMRST#
DIMM_ON
RUN_ON
EC_PCH_PWROK
ODD_MD
WLAN_PWRON
LED_ACPI#
LED_CHARGE#
LED_BATLOW#
LED_BLUETOOTH#
SUSPWROK
PM_SLP_S4#
PM_SLP_S3#
EC_ALLSYSPG
PWR_SW#
PM_SLP_S5#
LID#
43R5%0402
R382
H_PECI
CI2
X_C10p25N0402
ECO_SW#
TURBO_SW#
Cinema Pro_SW#
ENCHG
PWR_LED#
LED_WLAN#
PM_PWRBTN#
BT_PWR_ON
CAMERA_ON#
CI1
CI4
LED_NUM#
LED_CAP#
KBOUT0
KBOUT1
KBOUT2
KBOUT3
KBOUT4
KBOUT5
KBOUT6
KBOUT7
KBOUT8
KBOUT9
KBOUT10
KBOUT11
KBOUT12
KBOUT13
KBOUT14
KBOUT15
KBIN0
KBIN1
KBIN2
KBIN3
KBIN4
KBIN5
KBIN6
KBIN7
2010/6/29 同ms1481, NC
2010/6/29 MS1481 機構 只能支援POWER LED & P1 LED(Turbo)
LED_TURBO#
LED_TP-OFF
TPJNC55
CAP_RST
EC_DE_POP
VOL+_SW#
VOL-_SW#
EC_RD#
EC_WR#
EC_SPI_CLK
EC_CS#
TP_CLK
TP_DATA
I_BT_DISABLE#
AW_BT_DISABLE#
USBEN_EC
TPJNC1
TPJNC2
EC_XIN
EC_XOUT
SUSCLK
R14
X_0R0402
X_ER1
22R0402
R10
X_100KR0402
C147
X_22p50N0402
Y1
32.768KHZ12.5p_S-RH-2
C2
C22p50N0402
C1
C3
C4.7u6.3X0603
20101027 Change
U2
MX25L512MC-12G-RH
R3
R18
2.2KR0402
SPI_HOLD#
EC_SPICLK
EC_WR#
EC_CS#
EC_RD#
ER1
22R0402
EC1
C22p50N0402
J23
FPC25P-T-1PITCH_WHITE-RH
N5A-25F0110-A81
EMI REQUEST
CI21
CI17
CI15
CI13
CI11
CI9
CI7
CI5
CI18
CI16
CI14
CI12
CI10
CI8
CI6
CI3
C100p16N0402
N5A-14F0110-A81
CON1
FPC14P-T-0.5PITCH_WHITE-RH
PWR_SW#
Cinema Pro_SW#
ECO_SW#
TURBO_SW#
VOL+_SW#
VOL-_SW#
PWR_LED#
LED_ECO#
LED_TURBO#
LED_Cinema Pro#
TPJNC53
TPJNC54
CON4
BH1X14HS-1.25PITCH_WHITE-RH
N32-1140060-H06
LPC_FRAME#
LAD3
LAD2
LAD1
LAD0
L_LDRQ0#
CLK_PCIF_PORT80
INT_SERIRQ
LPC_RST#
FWH_ID0
R260
X_10KR0402
R8
10KR0402
1_8VRUN_PWRGD
+1_5VDIMM_PWRGD
+0.85V_PWRGD
+VTT_CORE_PWRGD
R7
R5
R4
R6
0R0402
NC7WZ17P6X_NL_SC70-6-RH
U1A
EC_ALLSYSPG
2010/6/29 MS1481 機構 只能支援POWER LED & P1 LED(Turbo)

Change to High Active

NEW FUNCTION

EMI REQUEST

USE SUSCLK:R35、 R141 Stuff ; Y5、C107、C106 No Stuff
USE Crystal:R35、 R141 No Stuff ; Y5、C107、C106 Stuff

MSI CONFIDENTIAL
60013/29 周小康 RD(C) 0110516001 ONLY
FOR RMA維修(劉松林)

MICRO-STAR INT'L CO.,LTD.

Title
KBC 3930

Size Custom
Document Number MS-1482
Rev 0A

Date: Friday, October 29, 2010
Sheet 26 of 44

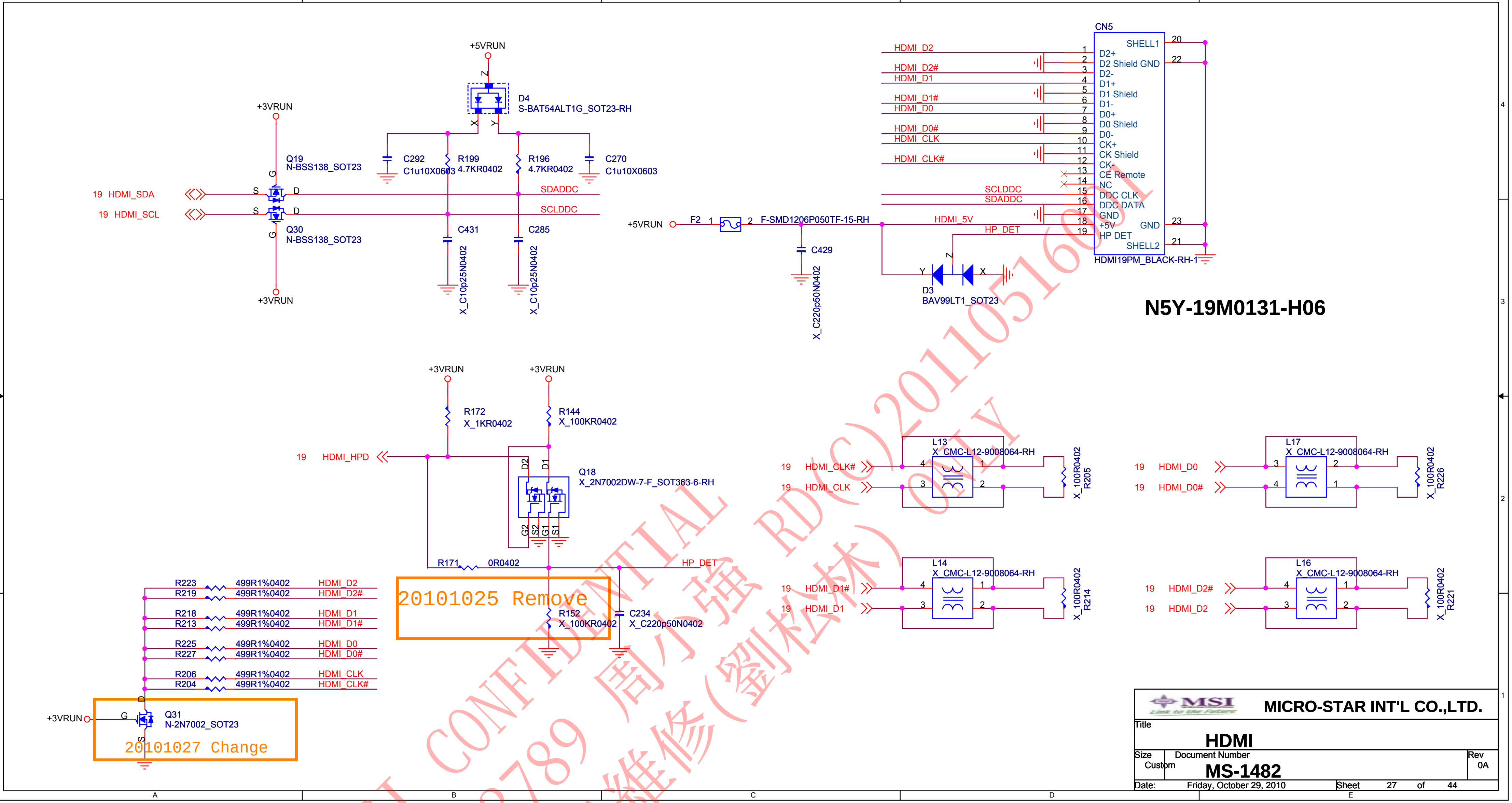

+5VRUN
D4
S-BAT54ALT1G_SOT23-RH
+3VRUN
Q19
N-BSS138_SOT23
C292
C1u10X0603
R199
4.7KR0402
R196
4.7KR0402
C270
C1u10X0603
19 HDMI_SDA
19 HDMI_SCL
SDADDC
SCLDDC
Q30
N-BSS138_SOT23
C431
X_C10p25N0402
C285
X_C10p25N0402
+3VRUN
CN5
HDMI_D2
HDMI_D2#
HDMI_D1
HDMI_D1#
HDMI_D0
HDMI_D0#
HDMI_CLK
HDMI_CLK#
SCLDDC
SDADDC
HDMI_5V
HP_DET
SHELL1
D2+
D2 Shield GND
D2-
D1+
D1 Shield
D1-
D0+
D0 Shield
D0-
CK+
CK Shield
CK-
CE Remote
NC
DDC CLK
DDC DATA
GND
+5V
HP DET
GND
SHELL2
HDMI19PM_BLACK-RH-1
+5VRUN
F2
F-SMD1206P050TF-15-RH
C429
X_C220p50N0402
D3
BAV99LT1_SOT23
N5Y-19M0131-H06
+3VRUN
+3VRUN
R172
X_1KR0402
R144
X_100KR0402
19 HDMI_HPD
Q18
X_2N7002DW-7-F_SOT363-6-RH
R171
0R0402
HP_DET
20101025 Remove
R152
X_100KR0402
C234
X_C220p50N0402
R223 499R1%0402 HDMI_D2
R219 499R1%0402 HDMI_D2#
R218 499R1%0402 HDMI_D1
R213 499R1%0402 HDMI_D1#
R225 499R1%0402 HDMI_D0
R227 499R1%0402 HDMI_D0#
R206 499R1%0402 HDMI_CLK
R204 499R1%0402 HDMI_CLK#
+3VRUN
Q31
N-2N7002_SOT23
20101027 Change
L13
X_CMC-L12-9008064-RH
19 HDMI_CLK#
19 HDMI_CLK
X_100R0402
R205
L17
X_CMC-L12-9008064-RH
19 HDMI_D0
19 HDMI_D0#
X_100R0402
R226
L14
X_CMC-L12-9008064-RH
19 HDMI_D1#
19 HDMI_D1
X_100R0402
R214
L16
X_CMC-L12-9008064-RH
19 HDMI_D2#
19 HDMI_D2
X_100R0402
R221

MICRO-STAR INT'L CO.,LTD.

Title	**HDMI**
Size: Custom	Document Number: **MS-1482**
Rev	0A
Date:	Friday, October 29, 2010
Sheet	27 of 44

MSI CONFIDENTIAL 周小强 RD(C)20110516001
60013789 FOR RMA维修(刘松林)ONLY

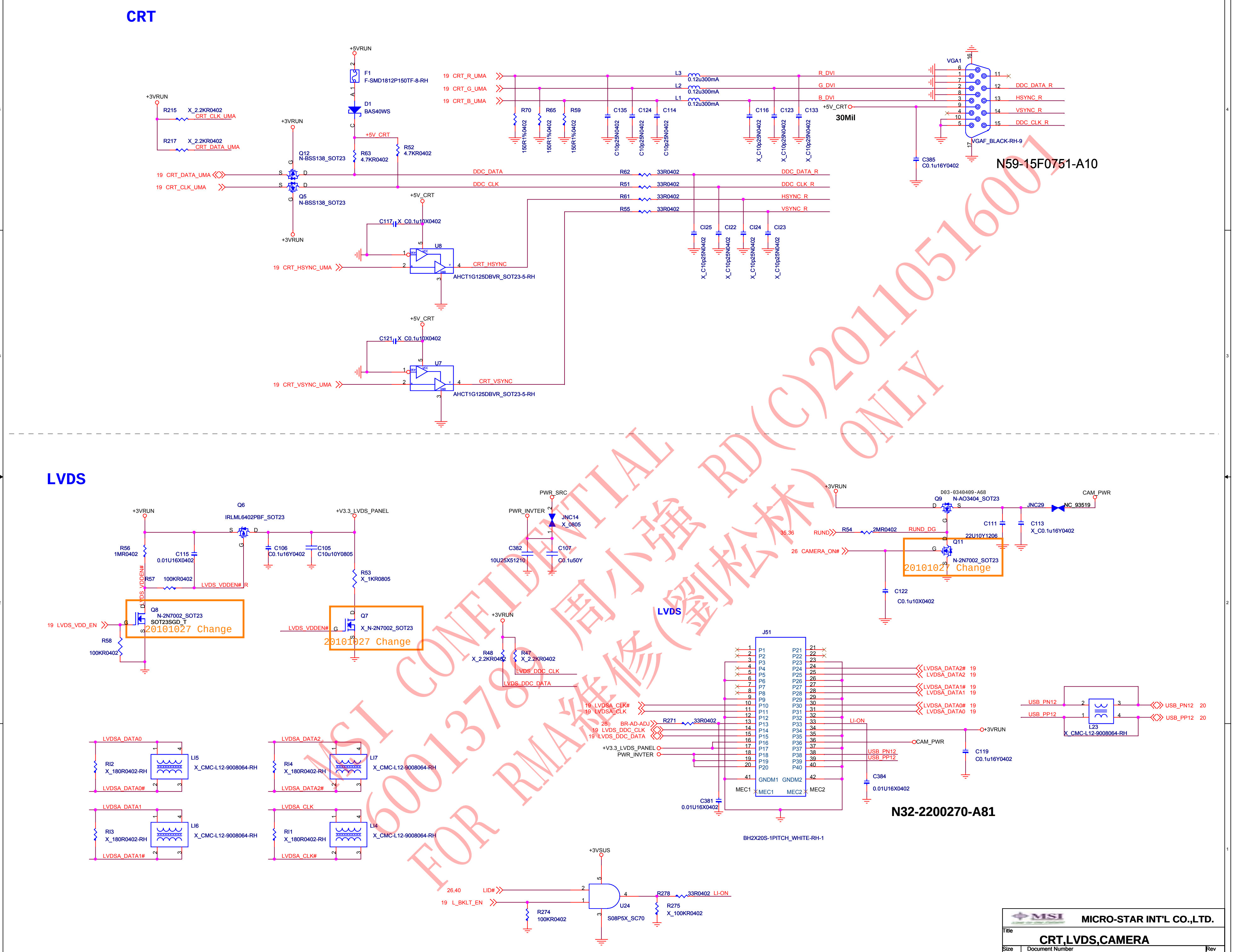
CRT
+5VRUN
F1
F-SMD1812P150TF-8-RH
D1
BAS40WS
+5V_CRT
R52
4.7KR0402
R63
4.7KR0402
+3VRUN
R215
X_2.2KR0402
CRT_CLK_UMA
R217
X_2.2KR0402
CRT_DATA_UMA
Q12
N-BSS138_SOT23
Q5
N-BSS138_SOT23
19 CRT_DATA_UMA
19 CRT_CLK_UMA
DDC_DATA
DDC_CLK
19 CRT_R_UMA
19 CRT_G_UMA
19 CRT_B_UMA
L3
L2
L1
0.12u300mA
R_DVI
G_DVI
B_DVI
R70
R65
R59
150R1%0402
C135
C124
C114
C116
C123
C133
C10p25N0402
X_C10p25N0402
+5V_CRT
30Mil
VGA1
DDC_DATA_R
HSYNC_R
VSYNC_R
DDC_CLK_R
VGAF_BLACK-RH-9
C385
C0.1u16Y0402
N59-15F0751-A10
R62
R51
R61
R55
33R0402
CI25
CI22
CI24
CI23
C117
X_C0.1u10X0402
U8
CRT_HSYNC
19 CRT_HSYNC_UMA
AHCT1G125DBVR_SOT23-5-RH
C121
X_C0.1u10X0402
U7
CRT_VSYNC
19 CRT_VSYNC_UMA
AHCT1G125DBVR_SOT23-5-RH
LVDS
+3VRUN
Q6
IRLML6402PBF_SOT23
+V3.3_LVDS_PANEL
R56
1MR0402
C115
0.01U16X0402
C106
C0.1u16Y0402
C105
C10u10Y0805
R57
100KR0402
LVDS_VDDEN#_R
LVDS_VDDEN#
R53
X_1KR0805
Q8
N-2N7002_SOT23
SOT23SGD_T
20101027 Change
19 LVDS_VDD_EN
R58
100KR0402
Q7
X_N-2N7002_SOT23
20101027 Change
PWR_SRC
PWR_INVTER
JNC14
X_0805
C382
10U25X51210
C107
C0.1u50Y
+3VRUN
R48
X_2.2KR0402
R47
X_2.2KR0402
LVDS_DDC_CLK
LVDS_DDC_DATA
LVDS
J51
19 LVDSA_CLK#
19 LVDSA_CLK
26 BR-AD-ADJ
R271
33R0402
19 LVDS_DDC_CLK
19 LVDS_DDC_DATA
+V3.3_LVDS_PANEL
PWR_INVTER
LVDSA_DATA2# 19
LVDSA_DATA2 19
LVDSA_DATA1# 19
LVDSA_DATA1 19
LVDSA_DATA0# 19
LVDSA_DATA0 19
LI-ON
+3VRUN
CAM_PWR
USB_PN12
USB_PP12
C119
C0.1u16Y0402
C384
0.01U16X0402
C381
0.01U16X0402
GNDM1
GNDM2
MEC1
MEC2
N32-2200270-A81
BH2X20S-1PITCH_WHITE-RH-1
D03-0340409-A68
Q9
N-AO3404_SOT23
JNC29
NC_93519
CAM_PWR
C111
22U10Y1206
C113
X_C0.1u16Y0402
35,36 RUND
R54
2MR0402
RUND_DG
Q11
N-2N7002_SOT23
26 CAMERA_ON#
20101027 Change
C122
C0.1u10X0402
USB_PN12
USB_PP12
L23
X_CMC-L12-9008064-RH
USB_PN12 20
USB_PP12 20
LVDSA_DATA0
RI2
X_180R0402-RH
LI5
X_CMC-L12-9008064-RH
LVDSA_DATA0#
LVDSA_DATA2
RI4
X_180R0402-RH
LI7
X_CMC-L12-9008064-RH
LVDSA_DATA2#
LVDSA_DATA1
RI3
X_180R0402-RH
LI6
X_CMC-L12-9008064-RH
LVDSA_DATA1#
LVDSA_CLK
RI1
X_180R0402-RH
LI4
X_CMC-L12-9008064-RH
LVDSA_CLK#
+3VSUS
26,40 LID#
19 L_BKLT_EN
R274
100KR0402
U24
S08P5X_SC70
R278
33R0402
LI-ON
R275
X_100KR0402

MSI CONFIDENTIAL 周小強 RD(C)2011051600l FOR RMA維修(劉松林) ONLY

MSI
MICRO-STAR INT'L CO.,LTD.

Title
CRT,LVDS,CAMERA

Size Custom
Document Number MS-1482
Rev 0A

Date:
Sheet 28 of 44

SATA ODD

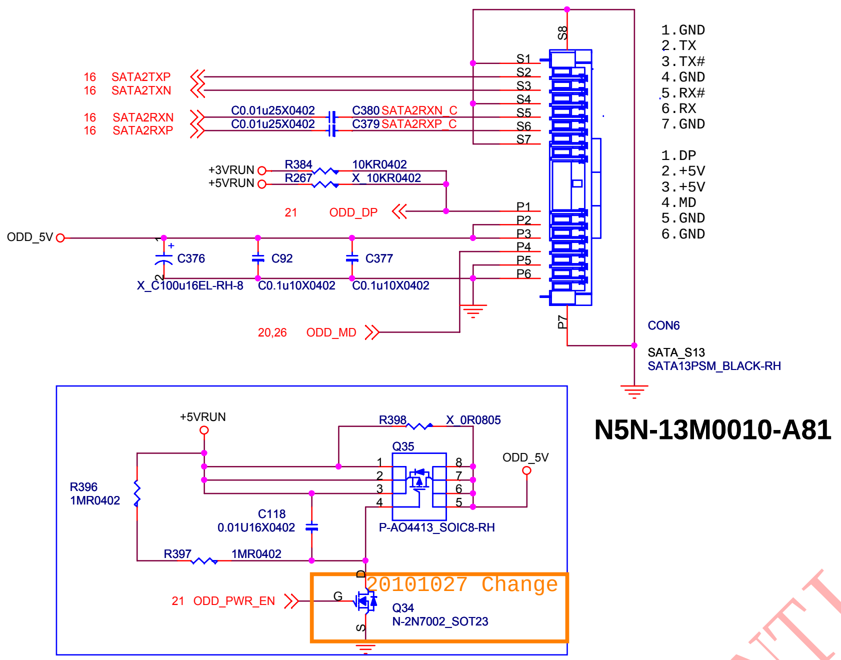

16 SATA2TXP
16 SATA2TXN
16 SATA2RXN
16 SATA2RXP
C0.01u25X0402
C0.01u25X0402
C380 SATA2RXN_C
C379 SATA2RXP_C
+3VRUN
+5VRUN
R384 10KR0402
R267 X_10KR0402
21 ODD_DP
ODD_5V
C376
C92
C377
X_C100u16EL-RH-8
C0.1u10X0402
C0.1u10X0402
20,26 ODD_MD
S1
S2
S3
S4
S5
S6
S7
S8
P1
P2
P3
P4
P5
P6
P7
1.GND
2.TX
3.TX#
4.GND
5.RX#
6.RX
7.GND
1.DP
2.+5V
3.+5V
4.MD
5.GND
6.GND
CON6
SATA_S13
SATA13PSM_BLACK-RH
+5VRUN
R398 X_0R0805
Q35
ODD_5V
R396
1MR0402
C118
0.01U16X0402
P-AO4413_SOIC8-RH
R397 1MR0402
20101027 Change
21 ODD_PWR_EN
G
D
S
Q34
N-2N7002_SOT23

N5N-13M0010-A81

CPU FAN

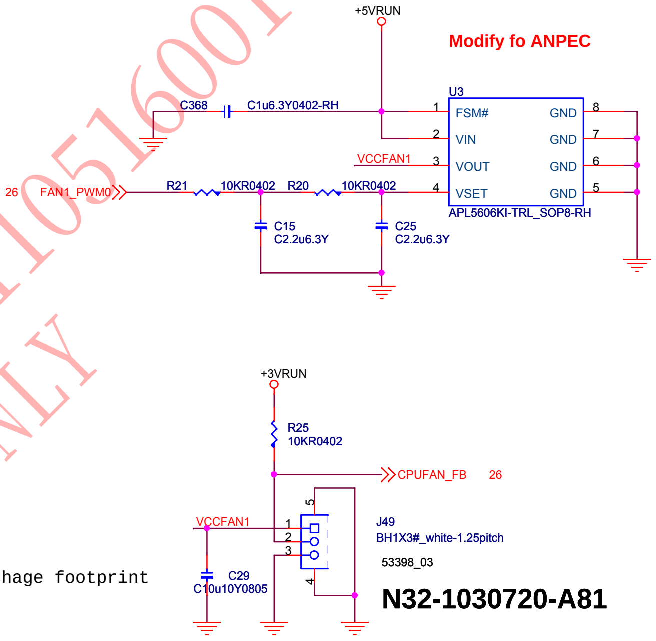

+5VRUN
Modify fo ANPEC
C368
C1u6.3Y0402-RH
U3
FSM#
VIN
VOUT
VSET
GND
GND
GND
GND
VCCFAN1
26 FAN1_PWM0
R21 10KR0402
R20 10KR0402
C15
C2.2u6.3Y
C25
C2.2u6.3Y
APL5606KI-TRL_SOP8-RH
+3VRUN
R25
10KR0402
CPUFAN_FB 26
VCCFAN1
J49
BH1X3#_white-1.25pitch
53398_03
C29
C10u10Y0805

9/10 chage footprint

N32-1030720-A81

SATA HDD

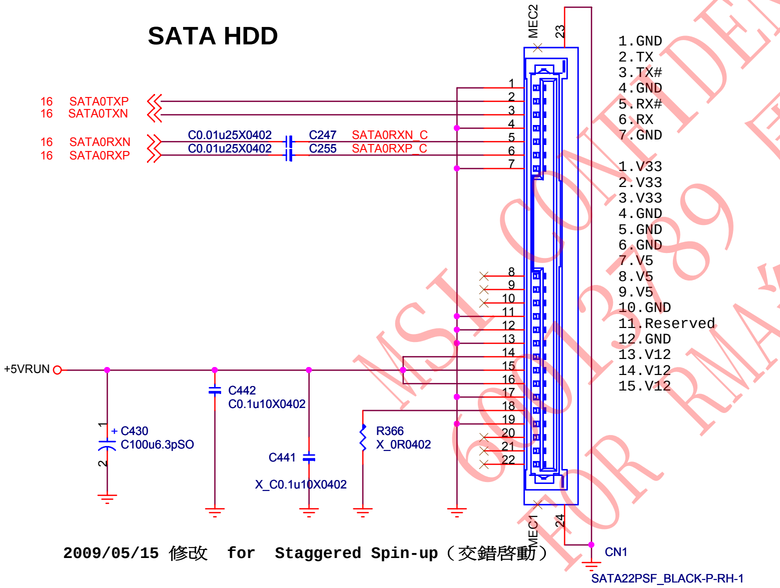

16 SATA0TXP
16 SATA0TXN
16 SATA0RXN
16 SATA0RXP
C0.01u25X0402
C0.01u25X0402
C247 SATA0RXN_C
C255 SATA0RXP_C
MEC2
MEC1
+5VRUN
C442
C0.1u10X0402
C430
C100u6.3pSO
C441
X_C0.1u10X0402
R366
X_0R0402
1.GND
2.TX
3.TX#
4.GND
5.RX#
6.RX
7.GND
1.V33
2.V33
3.V33
4.GND
5.GND
6.GND
7.V5
8.V5
9.V5
10.GND
11.Reserved
12.GND
13.V12
14.V12
15.V12
CN1
SATA22PSF_BLACK-P-RH-1

2009/05/15 修改 for Staggered Spin-up（交錯啓動）

N5N-22F0160-A81

MSI CONFIDENTIAL
6013789 周小強 RD(C)201105160001
FOR RMA維修(劉松林) ONLY

MSI
MICRO-STAR INT'L CO.,LTD.

Title	ODD,HDD,FAN	
Size A3	Document Number MS-1482	Rev 0A
Date:	Sheet 29 of 44	

Note: add 0.1u cap at each power pin of LAN, please don't save.

For RTL8105E
* C1841 to C1844 are for VDD10 pins-- 3, 13, 29, 45.

For RTL8111E
* C1841 to C1848 are for VDD10 pins-- 3, 6, 9, 13, 29, 41, 45.

Part Reference	Choke1	C1840	C1846	R1662	R1668
Enable Switch Regulator	_	_	_	_	_
Disable Switch Regulator	X	X	X	X	X

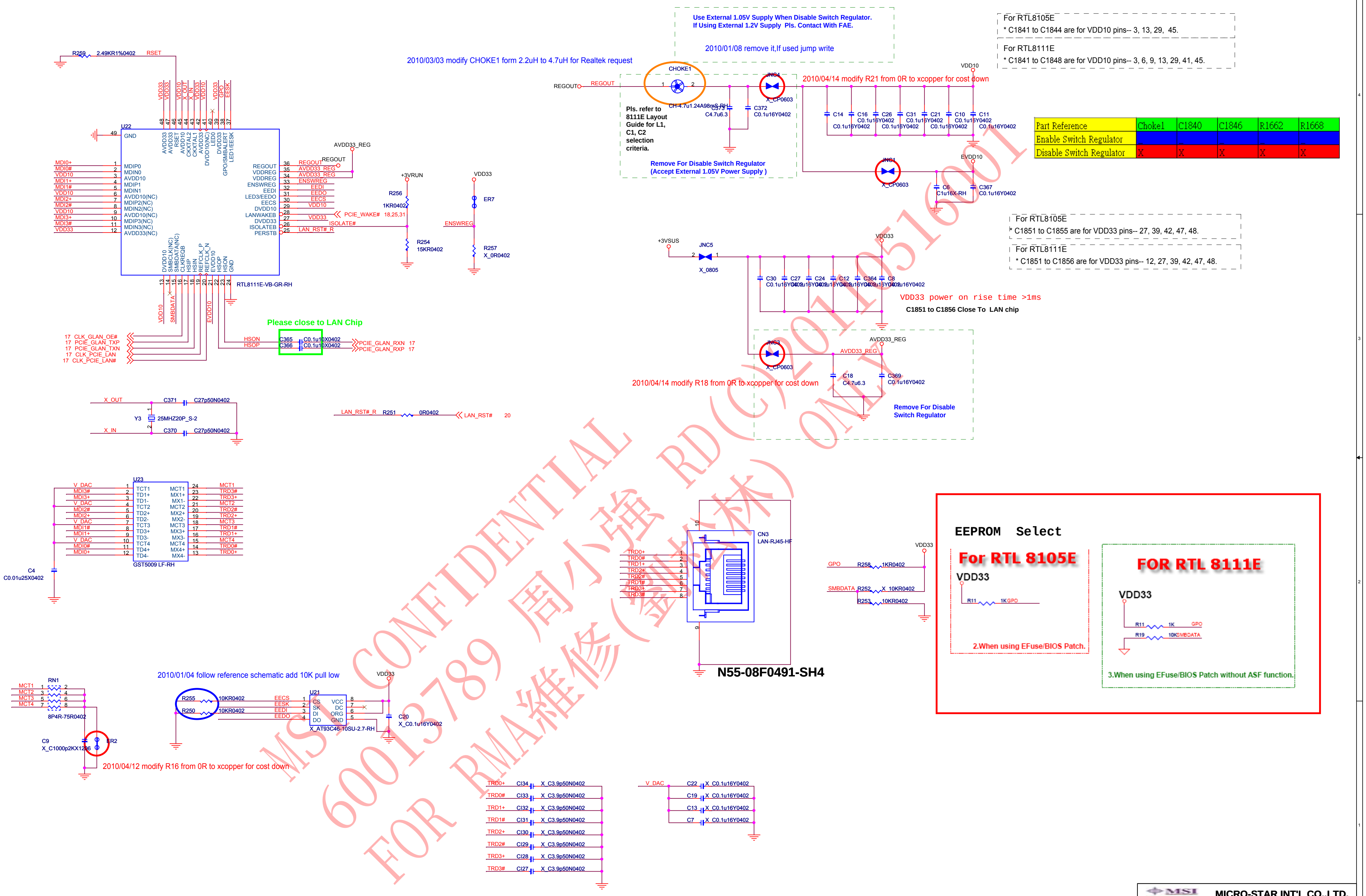

R259 2.49KR1%0402 RSET
U22
GND
MDI0+ MDI0# VDD10 MDI1+ MDI1# VDD10 MDI2+ MDI2# VDD10 MDI3+ MDI3# VDD33
MDIP0 MDIN0 AVDD10 MDIP1 MDIN1 AVDD10(NC) MDIP2(NC) MDIN2(NC) AVDD10(NC) MDIP3(NC) MDIN3(NC) AVDD33(NC)
AVDD33 AVDD33 RSET AVDD10 CKXTAL2 CKXTAL1 AVDD33 DVDD10(NC) LED0 DVDD33 GPO/SMBALERT LED1/EESK
REGOUT VDDREG VDDREG ENSWREG EEDI LED3/EEDO EECS DVDD10 LANWAKEB DVDD33 ISOLATEB PERSTB
DVDD10 SMBCLK(NC) SMBDATA(NC) CLKREQB HSIP HSIN REFCLK_P REFCLK_N EVDD10 HSOP HSON GND
RTL8111E-VB-GR-RH
AVDD33_REG REGOUT ENSWREG EEDI EEDO EECS VDD10 VDD33 ISOLATE# LAN_RST#_R
PCIE_WAKE# 18,25,31
+3VRUN R256 1KR0402 R254 15KR0402
VDD33 ER7 R257 X_0R0402
17 CLK_GLAN_OE#
17 PCIE_GLAN_TXP
17 PCIE_GLAN_TXN
17 CLK_PCIE_LAN
17 CLK_PCIE_LAN#
Please close to LAN Chip
HSON HSOP C365 C366 C0.1u10X0402
PCIE_GLAN_RXN 17
PCIE_GLAN_RXP 17
X_OUT C371 C27p50N0402
Y3 25MHZ20P_S-2
X_IN C370 C27p50N0402
LAN_RST#_R R251 0R0402 LAN_RST# 20
2010/03/03 modify CHOKE1 form 2.2uH to 4.7uH for Realtek request
Use External 1.05V Supply When Disable Switch Regulator.
If Using External 1.2V Supply Pls. Contact With FAE.
2010/01/08 remove it,If used jump write
REGOUT CHOKE1 CH-4.7u1.24A98mS-RH
C373 C4.7u6.3 C372 C0.1u16Y0402
JNC4 X_CP0603
Pls. refer to 8111E Layout Guide for L1, C1, C2 selection criteria.
Remove For Disable Switch Regulator (Accept External 1.05V Supply)
2010/04/14 modify R21 from 0R to xcopper for cost down
VDD10 C14 C16 C26 C31 C21 C10 C11 C0.1u16Y0402
JNC1 X_CP0603 EVDD10 C6 C1u16X-RH C367 C0.1u16Y0402
For RTL8105E
* C1851 to C1855 are for VDD33 pins-- 27, 39, 42, 47, 48.
For RTL8111E
* C1851 to C1856 are for VDD33 pins-- 12, 27, 39, 42, 47, 48.
+3VSUS JNC5 X_0805 VDD33
C30 C27 C24 C12 C364 C8 C0.1u16Y0402
VDD33 power on rise time >1ms
C1851 to C1856 Close To LAN chip
JNC3 X_CP0603 AVDD33_REG C18 C4.7u6.3 C369 C0.1u16Y0402
2010/04/14 modify R18 from 0R to xcopper for cost down
Remove For Disable Switch Regulator
U23
V_DAC MDI3# MDI3+ V_DAC MDI2# MDI2+ V_DAC MDI1# MDI1+ V_DAC MDI0# MDI0+
TCT1 TD1+ TD1- TCT2 TD2+ TD2- TCT3 TD3+ TD3- TCT4 TD4+ TD4-
MCT1 MX1+ MX1- MCT2 MX2+ MX2- MCT3 MX3+ MX3- MCT4 MX4+ MX4-
MCT1 TRD3# TRD3+ MCT2 TRD2# TRD2+ MCT3 TRD1# TRD1+ MCT4 TRD0# TRD0+
GST5009 LF-RH
C4 C0.01u25X0402
CN3 LAN-RJ45-HF
TRD0+ TRD0# TRD1+ TRD2+ TRD2# TRD1# TRD3+ TRD3#
N55-08F0491-SH4
VDD33 GPO R258 1KR0402 SMBDATA R252 X_10KR0402 R253 10KR0402
EEPROM Select
For RTL 8105E
VDD33 R11 1K GPO
2.When using EFuse/BIOS Patch.
FOR RTL 8111E
VDD33 R11 1K GPO R19 10K SMBDATA
3.When using EFuse/BIOS Patch without ASF function.
MCT1 MCT2 MCT3 MCT4 RN1 8P4R-75R0402
C9 X_C1000p2KX1206 ER2
2010/04/12 modify R16 from 0R to xcopper for cost down
2010/01/04 follow reference schematic add 10K pull low
R255 10KR0402 R250 10KR0402
EECS EESK EEDI EEDO
U21 CS SK DI DO VCC DC ORG GND
X_AT93C46-10SU-2.7-RH
VDD33 C20 X_C0.1u16Y0402
TRD0+ TRD0# TRD1+ TRD1# TRD2+ TRD2# TRD3+ TRD3#
CI34 CI33 CI32 CI31 CI30 CI29 CI28 CI27 X_C3.9p50N0402
V_DAC C22 C19 C13 C7 X_C0.1u16Y0402

MSI CONFIDENTIAL 60013789 周小強 RD(C)2010516001 ONLY FOR RMA維修(劉書林)

MICRO-STAR INT'L CO.,LTD.

Title
GIGA LAN(RTL 8111EL)

Size Custom
Document Number MS-1482
Rev 0A

Date:
Sheet 30 of 44

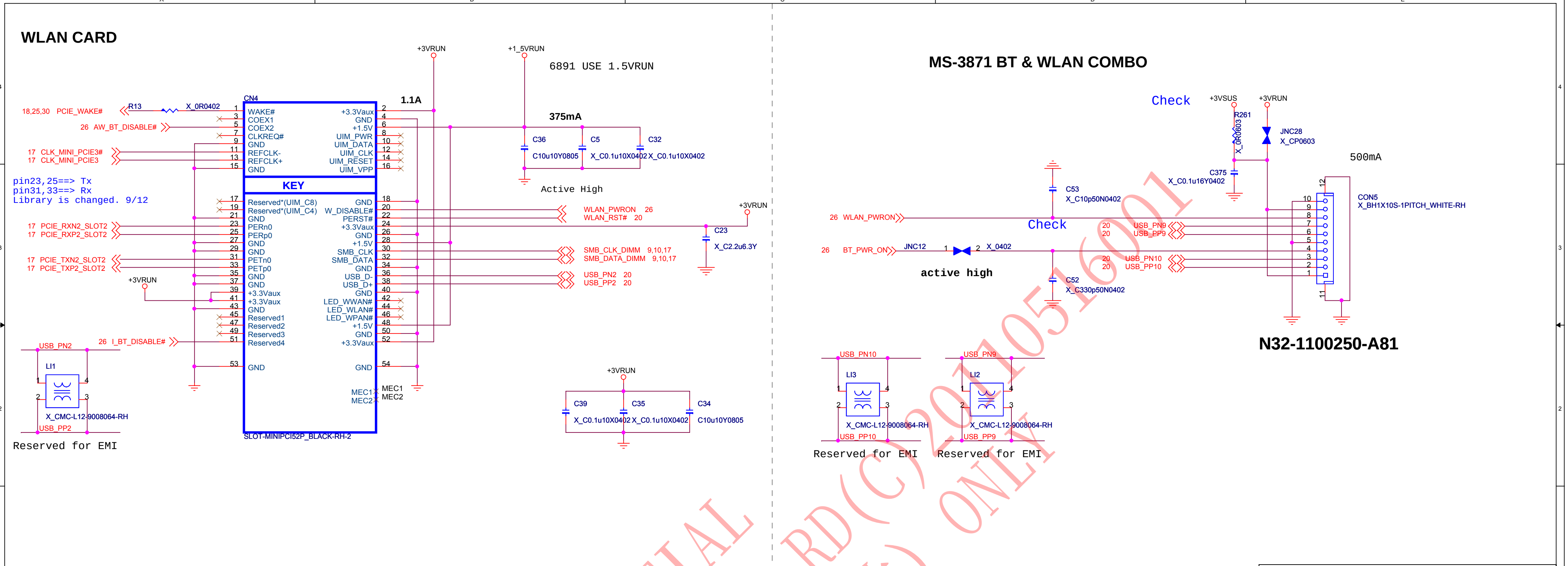
WLAN CARD
MS-3871 BT & WLAN COMBO
+3VRUN
+1_5VRUN
6891 USE 1.5VRUN
1.1A
375mA
CN4
18,25,30 PCIE_WAKE#
R13
X_0R0402
26 AW_BT_DISABLE#
17 CLK_MINI_PCIE3#
17 CLK_MINI_PCIE3
pin23,25==> Tx
pin31,33==> Rx
Library is changed. 9/12
17 PCIE_RXN2_SLOT2
17 PCIE_RXP2_SLOT2
17 PCIE_TXN2_SLOT2
17 PCIE_TXP2_SLOT2
WAKE#
COEX1
COEX2
CLKREQ#
GND
REFCLK-
REFCLK+
GND
KEY
Reserved*(UIM_C8)
Reserved*(UIM_C4)
PERn0
PERp0
PETn0
PETp0
+3.3Vaux
Reserved1
Reserved2
Reserved3
Reserved4
+1.5V
UIM_PWR
UIM_DATA
UIM_CLK
UIM_RESET
UIM_VPP
W_DISABLE#
PERST#
SMB_CLK
SMB_DATA
USB_D-
USB_D+
LED_WWAN#
LED_WLAN#
LED_WPAN#
MEC1
MEC2
SLOT-MINIPCI52P_BLACK-RH-2
C36
C10u10Y0805
C5
X_C0.1u10X0402
C32
X_C0.1u10X0402
Active High
WLAN_PWRON 26
WLAN_RST# 20
C23
X_C2.2u6.3Y
SMB_CLK_DIMM 9,10,17
SMB_DATA_DIMM 9,10,17
USB_PN2 20
USB_PP2 20
26 I_BT_DISABLE#
USB_PN2
USB_PP2
LI1
X_CMC-L12-9008064-RH
Reserved for EMI
C39
X_C0.1u10X0402
C35
X_C0.1u10X0402
C34
C10u10Y0805
Check
+3VSUS
R261
X_0R0603
JNC28
X_CP0603
500mA
C375
X_C0.1u16Y0402
C53
X_C10p50N0402
26 WLAN_PWRON
Check
20 USB_PN9
20 USB_PP9
26 BT_PWR_ON
JNC12
X_0402
active high
20 USB_PN10
20 USB_PP10
C52
X_C330p50N0402
CON5
X_BH1X10S-1PITCH_WHITE-RH
N32-1100250-A81
USB_PN10
USB_PP10
LI3
X_CMC-L12-9008064-RH
USB_PN9
USB_PP9
LI2
X_CMC-L12-9008064-RH
Reserved for EMI
Reserved for EMI

MICRO-STAR INT'L CO.,LTD.

Title
WLAN,BT,Combo

Size	Document Number	Rev
Custom	MS-1482	0A

Date: Friday, October 29, 2010 Sheet 31 of 44

MSI CONFIDENTIAL 60013789 周小強 RD(C)20170516001
FOR RMA維修(劉松林) ONLY

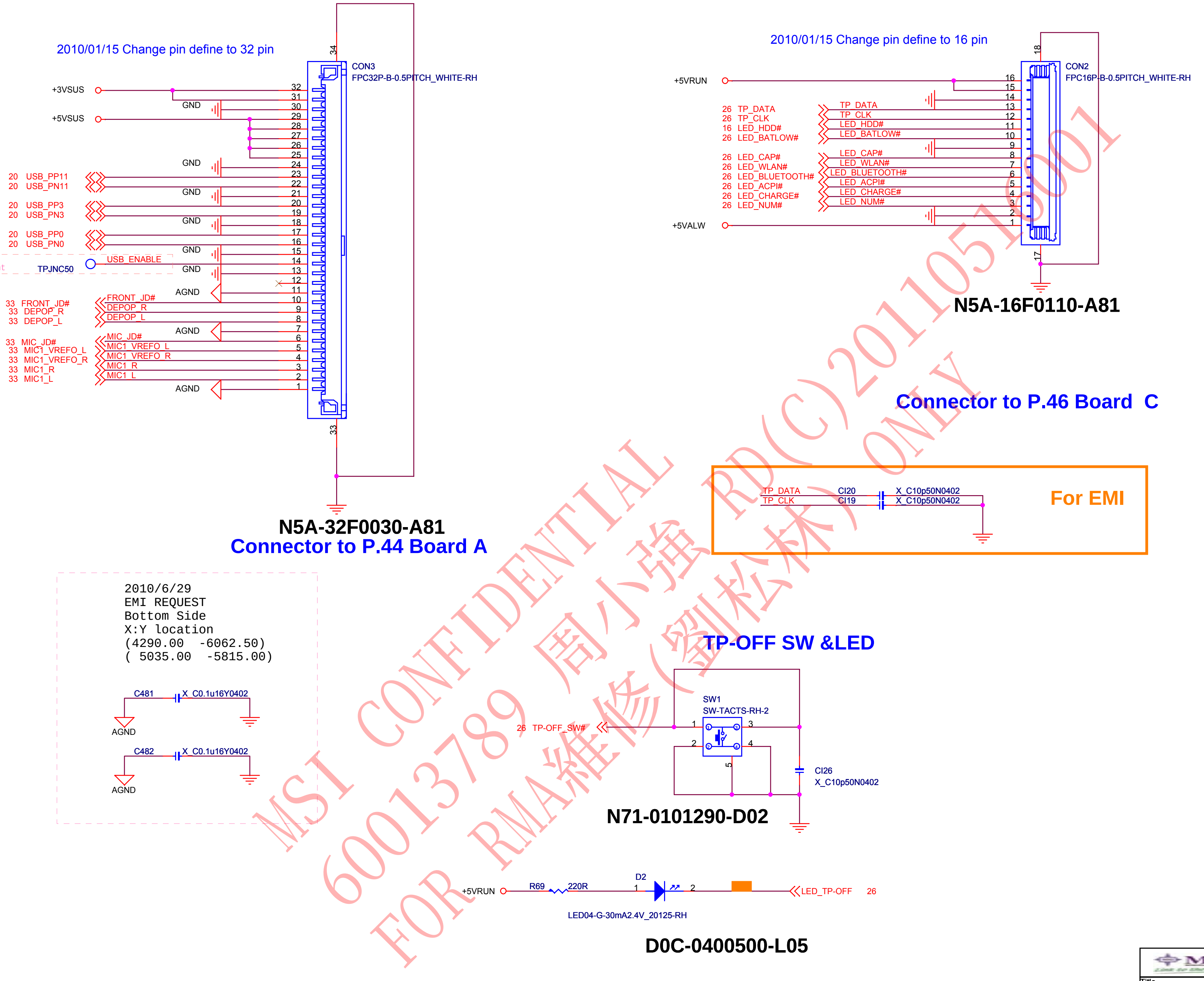
2010/01/15 Change pin define to 32 pin
CON3
FPC32P-B-0.5PITCH_WHITE-RH
+3VSUS
+5VSUS
GND
AGND
20 USB_PP11
20 USB_PN11
20 USB_PP3
20 USB_PN3
20 USB_PP0
20 USB_PN0
2010/6/29
Add Test point
TPJNC50
USB_ENABLE
33 FRONT_JD#
33 DEPOP_R
33 DEPOP_L
FRONT_JD#
DEPOP_R
DEPOP_L
33 MIC_JD#
33 MIC1_VREFO_L
33 MIC1_VREFO_R
33 MIC1_R
33 MIC1_L
MIC_JD#
MIC1_VREFO_L
MIC1_VREFO_R
MIC1_R
MIC1_L
34
33
32
31
30
29
28
27
26
25
24
23
22
21
20
19
18
17
16
15
14
13
12
11
10
9
8
7
6
5
4
3
2
1
N5A-32F0030-A81
Connector to P.44 Board A
2010/01/15 Change pin define to 16 pin
CON2
FPC16P-B-0.5PITCH_WHITE-RH
+5VRUN
+5VALW
26 TP_DATA
26 TP_CLK
16 LED_HDD#
26 LED_BATLOW#
26 LED_CAP#
26 LED_WLAN#
26 LED_BLUETOOTH#
26 LED_ACPI#
26 LED_CHARGE#
26 LED_NUM#
TP_DATA
TP_CLK
LED_HDD#
LED_BATLOW#
LED_CAP#
LED_WLAN#
LED_BLUETOOTH#
LED_ACPI#
LED_CHARGE#
LED_NUM#
18
17
N5A-16F0110-A81
Connector to P.46 Board C
TP_DATA
TP_CLK
CI20
CI19
X_C10p50N0402
X_C10p50N0402
For EMI
C481
X_C0.1u16Y0402
C482
X_C0.1u16Y0402
AGND
TP-OFF SW &LED
SW1
SW-TACTS-RH-2
26 TP-OFF_SW#
CI26
X_C10p50N0402
N71-0101290-D02
+5VRUN
R69
220R
D2
LED04-G-30mA2.4V_20125-RH
LED_TP-OFF 26
D0C-0400500-L05

2010/6/29
EMI REQUEST
Bottom Side
X:Y location
(4290.00 -6062.50)
(5035.00 -5815.00)

MSI CONFIDENTIAL
60013789 周小強
FOR RMA維修(劉松林) RD(C)20110515001 ONLY

MICRO-STAR INT'L CO.,LTD.

Title
MDC,USB,CONN

Size	Document Number	Rev
A3	MS-1482	0A

Date: Friday, October 29, 2010
Sheet 32 of 44

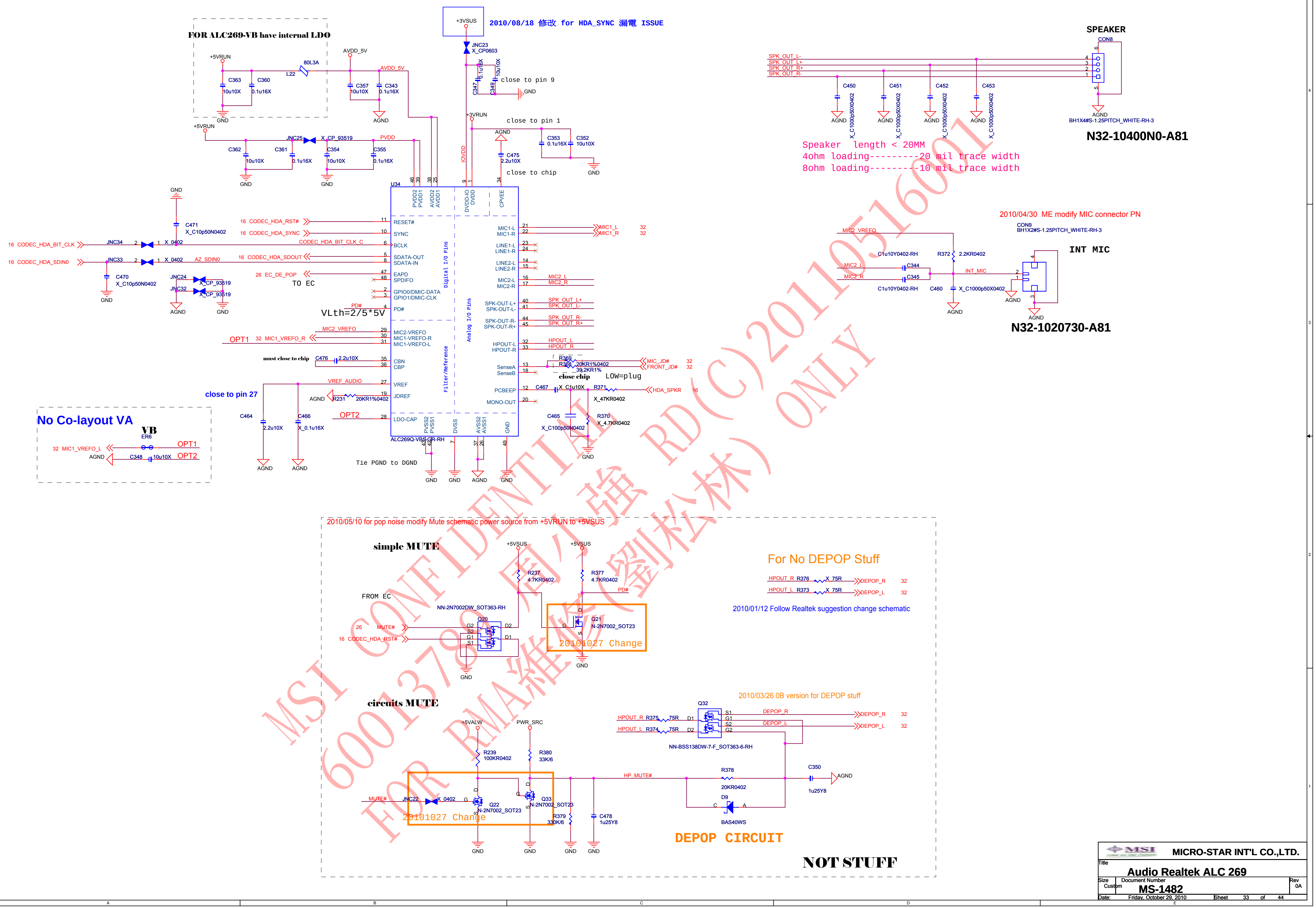
FOR ALC269-VB have internal LDO
+5VRUN
C363 10u10X
C360 0.1u16X
L22 80L3A
AVDD_5V
C357 10u10X
C343 0.1u16X
AGND
GND
+3VSUS
JNC23 X_CP0603
2010/08/18 修改 for HDA_SYNC 漏電 ISSUE
C347 0.1u16X
C349 10u10X
close to pin 9
+3VRUN
close to pin 1
C353 0.1u16X
C352 10u10X
C475 2.2u10X
close to chip
IOVDD
JNC25 X_CP_93519
PVDD
C362 10u10X
C361 0.1u16X
C354 10u10X
C355 0.1u16X
U34
PVDD2 PVDD1 AVDD2 AVDD1 DVDD-IO DVDD CPVEE
C471 X_C10p50N0402
16 CODEC_HDA_BIT_CLK
JNC34 X_0402
16 CODEC_HDA_SDIN0
JNC33 X_0402
AZ_SDIN0
C470 X_C10p50N0402
JNC24 X_CP_93519
JNC32 X_CP_93519
16 CODEC_HDA_RST#
16 CODEC_HDA_SYNC
CODEC_HDA_BIT_CLK_C
16 CODEC_HDA_SDOUT
26 EC_DE_POP
TO EC
PD#
VLth=2/5*5V
RESET# SYNC BCLK SDATA-OUT SDATA-IN EAPD SPDIFO GPIO0/DMIC-DATA GPIO1/DMIC-CLK PD#
Digital I/O Pins
MIC2_VREFO
OPT1 32 MIC1_VREFO_R
MIC2-VREFO MIC1-VREFO-R MIC1-VREFO-L
must close to chip
C476 2.2u10X
CBN CBP
Filter/Reference
VREF_AUDIO
VREF JDREF
close to pin 27
R231 20KR1%0402
OPT2
LDO-CAP
C464 2.2u10X
C466 X_0.1u16X
PVSS2 PVSS1 DVSS AVSS2 AVSS1 GND
ALC269Q-VB5-GR-RH
Tie PGND to DGND
Analog I/O Pins
MIC1-L MIC1-R MIC1_L 32 MIC1_R 32
LINE1-L LINE1-R LINE2-L LINE2-R
MIC2-L MIC2-R MIC2_L MIC2_R
SPK-OUT-L+ SPK-OUT-L- SPK_OUT_L+ SPK_OUT_L-
SPK-OUT-R- SPK-OUT-R+ SPK_OUT_R- SPK_OUT_R+
HPOUT-L HPOUT-R HPOUT_L HPOUT_R
SenseA SenseB
R369 20KR1%0402 MIC_JD# 32
R368 39.2KR1% FRONT_JD# 32
close chip
LOW=plug
PCBEEP MONO-OUT
C467 X_C1u10X
R371 X_47KR0402
HDA_SPKR 16
C465 X_C100p50N0402
R370 X_4.7KR0402
No Co-layout VA
VB
ER6
32 MIC1_VREFO_L
OPT1
C348 10u10X
OPT2
SPEAKER
CON8
SPK_OUT_L- SPK_OUT_L+ SPK_OUT_R+ SPK_OUT_R-
C450 C451 C452 C453 X_C1000p50X0402
BH1X4#S-1.25PITCH_WHITE-RH-3
N32-10400N0-A81
Speaker length < 20MM
4ohm loading---------20 mil trace width
8ohm loading---------10 mil trace width
2010/04/30 ME modify MIC connector PN
CON9 BH1X2#S-1.25PITCH_WHITE-RH-3
INT MIC
MIC2_VREFO
C1u10Y0402-RH
R372 2.2KR0402
MIC2_L C344
MIC2_R C345
INT_MIC
C460 X_C1000p50X0402
N32-1020730-A81
2010/05/10 for pop noise modify Mute schematic power source from +5VRUN to +5VSUS
simple MUTE
+5VSUS
R237 4.7KR0402
R377 4.7KR0402
FROM EC
NN-2N7002DW_SOT363-RH
Q20
26 MUTE#
16 CODEC_HDA_RST#
Q21 N-2N7002_SOT23
20101027 Change
For No DEPOP Stuff
HPOUT_R R376 X_75R DEPOP_R 32
HPOUT_L R373 X_75R DEPOP_L 32
2010/01/12 Follow Realtek suggestion change schematic
2010/03/26 0B version for DEPOP stuff
Q32
HPOUT_R R375 75R
HPOUT_L R374 75R
DEPOP_R 32
DEPOP_L 32
NN-BSS138DW-7-F_SOT363-6-RH
circuits MUTE
+5VALW
PWR_SRC
R239 100KR0402
R380 33K/6
MUTE# JNC22 X_0402
Q22 N-2N7002_SOT23
Q33 N-2N7002_SOT23
20101027 Change
R379 330K/6
C478 1u25Y8
HP_MUTE#
R378 20KR0402
D9 BAS40WS
C350 1u25Y8
DEPOP CIRCUIT
NOT STUFF

MSI CONFIDENTIAL 周小強 RD(C)20110516001
60013789
FOR RMA維修(劉松林) ONLY

MICRO-STAR INT'L CO.,LTD.

Title
Audio Realtek ALC 269

Size	Document Number	Rev
Custom	MS-1482	0A

Date: Friday, October 29, 2010 Sheet 33 of 44

Adapter input voltage set 19 Voltage

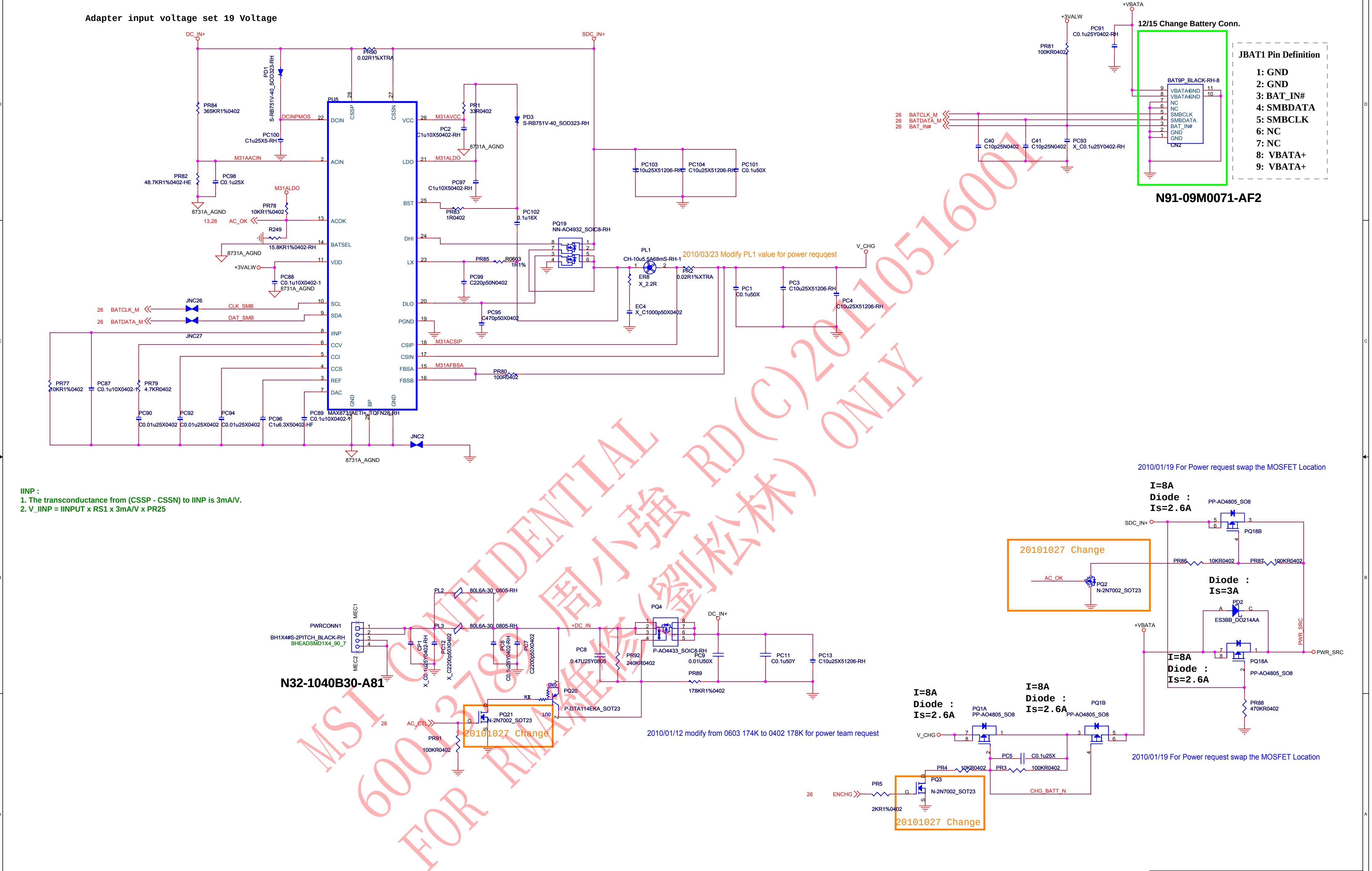
DC_IN+
SDC_IN+
PR90 0.02R1%XTRA
PD1 S-RB751V-40_SOD323-RH
PR84 365KR1%0402
PC100 C1u25X5-RH
PR82 48.7KR1%0402-HE
PC98 C0.1u25X
8731A_AGND
M31AACIN
M31ALDO
PR78 10KR1%0402
AC_OK
R249 15.8KR1%0402-RH
+3VALW
PC88 C0.1u10X0402-1
JNC26
CLK_SMB
DAT_SMB
BATCLK_M
BATDATA_M
JNC27
PR77 10KR1%0402
PC87 C0.1u10X0402-1
PR79 4.7KR0402
PC90 C0.01u25X0402
PC92 C0.01u25X0402
PC94 C0.01u25X0402
PC96 C1u6.3X50402-HF
PC89 C0.1u10X0402-1
PU5
MAX8731AETI+_TQFN28-RH
DCIN
ACIN
ACOK
BATSEL
VDD
SCL
SDA
IINP
CCV
CCI
CCS
REF
DAC
CSSP
CSSN
VCC
LDO
BST
DHI
LX
DLO
PGND
CSIP
CSIN
FBSA
FBSB
GND
BP
DCINPMOS
M31AVCC
PR1 33R0402
PC2 C1u10X50402-RH
PD3 S-RB751V-40_SOD323-RH
PC97 C1u10X50402-RH
PR83 1R0402
PC102 0.1u16X
PR85 R0603 1R1%
PC99 C220p50N0402
PC95 C470p50X0402
M31ACSIP
M31AFBSA
PR80 100R0402
JNC2
PQ19 NN-AO4932_SOIC8-RH
PL1 CH-10u5.5A68mS-RH-1
2010/03/23 Modify PL1 value for power requqest
PR2 0.02R1%XTRA
ER8 X_2.2R
EC4 X_C1000p50X0402
PC1 C0.1u50X
PC3 C10u25X51206-RH
PC4 C10u25X51206-RH
V_CHG
PC103 C10u25X51206-RH
PC104 C10u25X51206-RH
PC101 C0.1u50X
+3VALW
PR81 100KR0402
PC91 C0.1u25Y0402-RH
+VBATA
12/15 Change Battery Conn.
BAT9P_BLACK-RH-8
VBATA
GND
NC
SMBCLK
SMBDATA
BAT_IN#
CN2
BATCLK_M
BATDATA_M
BAT_IN#
C40 C10p25N0402
C41 C10p25N0402
PC93 X_C0.1u25Y0402-RH
N91-09M0071-AF2
2010/01/19 For Power request swap the MOSFET Location
I=8A Diode : Is=2.6A
PP-AO4805_SO8
PQ18B
20101027 Change
AC_OK
PQ2 N-2N7002_SOT23
PR86 10KR0402
PR87 100KR0402
Diode : Is=3A
PD2 ES3BB_DO214AA
+VBATA
PQ18A PP-AO4805_SO8
PWR_SRC
PR88 470KR0402
PWRCONN1
BH1X4#S-2PITCH_BLACK-RH
BHEADSMD1X4_90_7
MEC1
MEC2
PL2 80L6A-30_0805-RH
PL3 80L6A-30_0805-RH
+DC_IN
PC12 X_C2200p50X0402
PC5 C0.1u25Y0402-RH
PC7 C2200p50X0402
PQ4 P-AO4433_SOIC8-RH
DC_IN+
PC8 0.47U25Y0805
PR92 240KR0402
PC9 0.01U50X
PC11 C0.1u50Y
PC13 C10u25X51206-RH
PR89 178KR1%0402
N32-1040B30-A81
PQ20 P-DTA114EKA_SOT23
PQ21 N-2N7002_SOT23
AC_CTL
PR91 100KR0402
2010/01/12 modify from 0603 174K to 0402 178K for power team request
I=8A Diode : Is=2.6A
PQ1A PP-AO4805_SO8
PQ1B PP-AO4805_SO8
V_CHG
PC5 C0.1u25X
PR4 10KR0402
PR3 100KR0402
CHG_BATT_N
PQ3 N-2N7002_SOT23
PR5 2KR1%0402
ENCHG
2010/01/19 For Power request swap the MOSFET Location

JBAT1 Pin Definition

1: GND
2: GND
3: BAT_IN#
4: SMBDATA
5: SMBCLK
6: NC
7: NC
8: VBATA+
9: VBATA+

IINP :
1. The transconductance from (CSSP - CSSN) to IINP is 3mA/V.
2. V_IINP = IINPUT x RS1 x 3mA/V x PR25

MSI CONFIDENTIAL 60013789 周小強 RD(C)20110516001 FOR RMA維修(劉松林) ONLY

MICRO-STAR INT'L CO.,LTD.
Title
BATTERY SELETC/ CHARGER
Size Custom
Document Number MS-1482
Rev 0A
Date: Friday, October 29, 2010

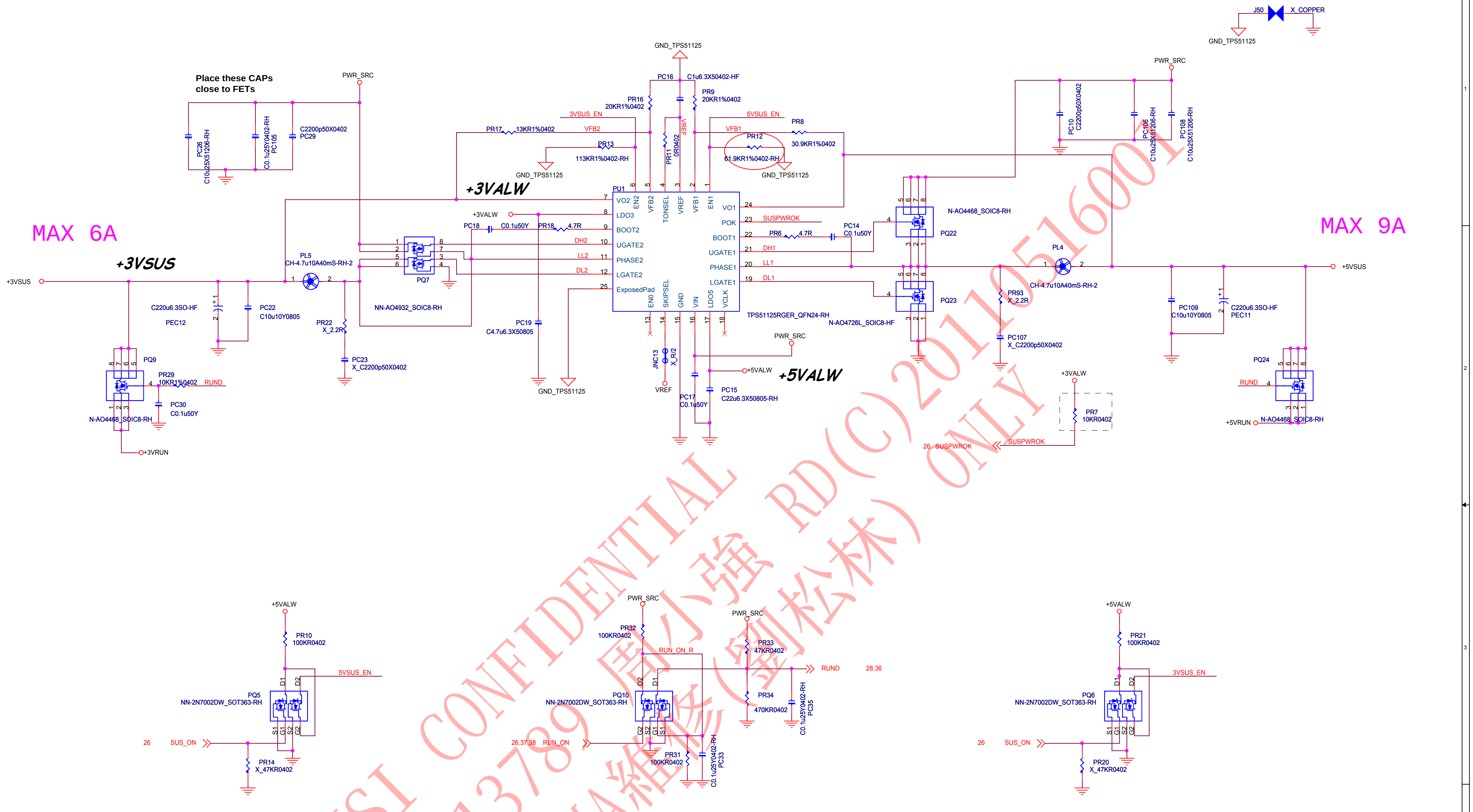
Place these CAPs close to FETs
MAX 6A
MAX 9A
+3VALW
+3VSUS
+5VALW
PWR_SRC
GND_TPS51125
J50
X_COPPER
PC16
C1u6.3X50402-HF
PR16
20KR1%0402
PR9
20KR1%0402
3VSUS_EN
5VSUS_EN
PR17
13KR1%0402
VFB2
VFB1
VREF
PR8
30.9KR1%0402
PR12
61.9KR1%0402-RH
PR13
113KR1%0402-RH
PR11
0R0402
PC26
C10u25X51206-RH
PC105
C0.1u25Y0402-RH
PC29
C2200p50X0402
PC10
C2200p50X0402
PC106
C10u25X51206-RH
PC108
C10u25X51206-RH
PU1
VO2
LDO3
BOOT2
UGATE2
PHASE2
LGATE2
ExposedPad
EN2
VFB2
TONSEL
VREF
VFB1
EN1
VO1
POK
BOOT1
UGATE1
PHASE1
LGATE1
EN0
SKIPSEL
GND
VIN
LDO5
VCLK
TPS51125RGER_QFN24-RH
DH2
LL2
DL2
DH1
LL1
DL1
SUSPWROK
PC18
C0.1u50Y
PR18
4.7R
PR6
4.7R
PC14
C0.1u50Y
PQ7
NN-AO4932_SOIC8-RH
PQ22
N-AO4468_SOIC8-RH
PQ23
N-AO4726L_SOIC8-HF
PL5
CH-4.7u10A40mS-RH-2
PL4
CH-4.7u10A40mS-RH-2
+3VSUS
+5VSUS
PC22
C10u10Y0805
C220u6.3SO-HF
PEC12
PR22
X_2.2R
PC23
X_C2200p50X0402
PC19
C4.7u6.3X50805
PR93
X_2.2R
PC107
X_C2200p50X0402
PC109
C10u10Y0805
C220u6.3SO-HF
PEC11
JNC13
X_R/2
PC17
C0.1u50Y
PC15
C22u6.3X50805-RH
PQ9
PR29
10KR1%0402
RUND
PC30
C0.1u50Y
N-AO4468_SOIC8-RH
+3VRUN
PQ24
+5VRUN
PR7
10KR0402
26 SUSPWROK
PR10
100KR0402
5VSUS_EN
PQ5
NN-2N7002DW_SOT363-RH
26 SUS_ON
PR14
X_47KR0402
PR32
100KR0402
RUN_ON_R
PR33
47KR0402
RUND
28,36
PR34
470KR0402
PC35
C0.1u25Y0402-RH
PQ10
NN-2N7002DW_SOT363-RH
26,37,38 RUN_ON
PR31
100KR0402
PC33
C0.1u25Y0402-RH
PR21
100KR0402
3VSUS_EN
PQ6
NN-2N7002DW_SOT363-RH
26 SUS_ON
PR20
X_47KR0402

MSI CONFIDENTIAL
60013789 周小強 RD(C)201105160001
FOR RMA維修(劉松林) ONLY

MICRO-STAR INT'L CO.,LTD.

Title
SYSTEM POWER

Size C
Document Number
MS-1482
Rev 1.0

Date: Friday, October 29, 2010
Sheet 35 of 44

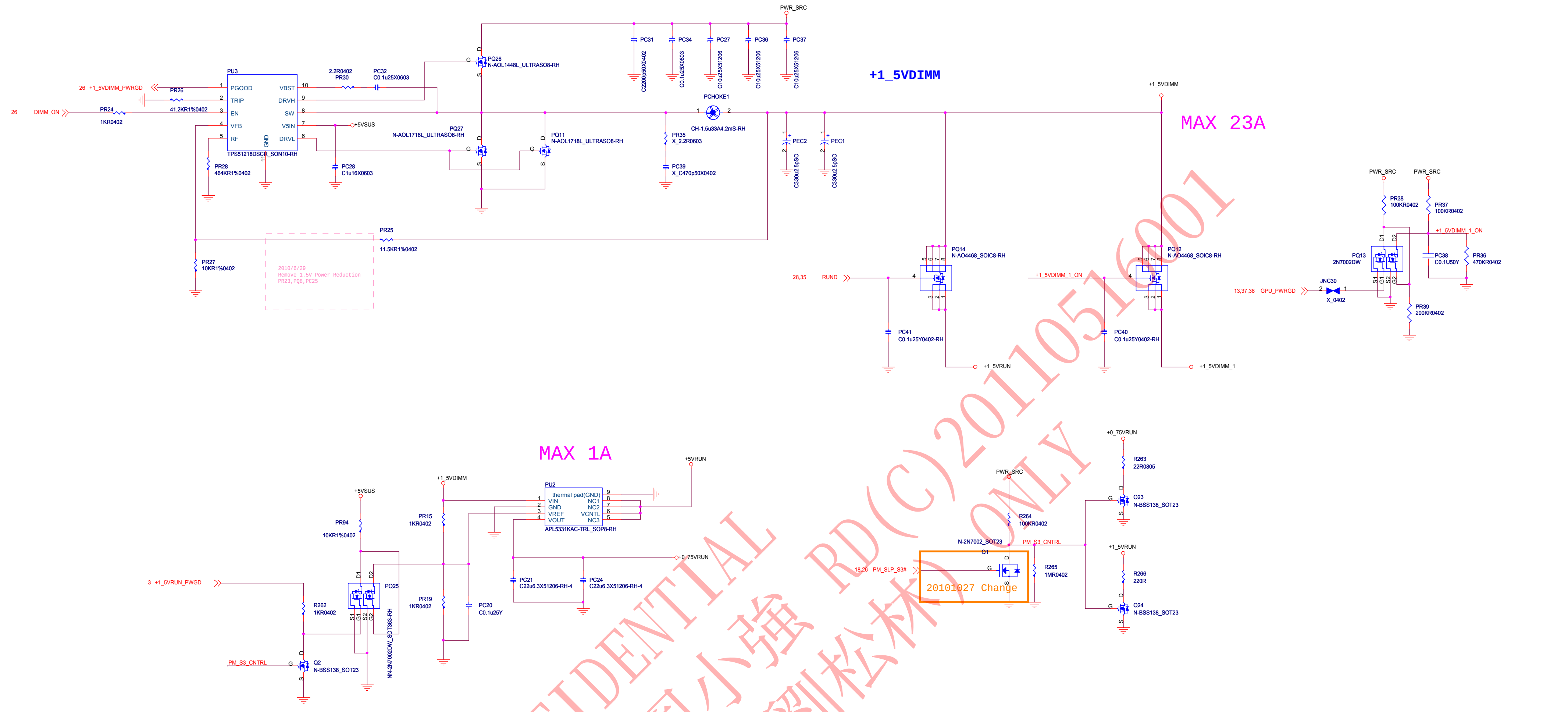
PU3
TPS51218DSCR_SON10-RH
PGOOD
TRIP
EN
VFB
RF
GND
VBST
DRVH
SW
V5IN
DRVL
26 +1_5VDIMM_PWRGD
PR26
41.2KR1%0402
26 DIMM_ON
PR24
1KR0402
PR28
464KR1%0402
2.2R0402
PR30
PC32
C0.1u25X0603
+5VSUS
PC28
C1u16X0603
PQ26
N-AOL1448L_ULTRASO8-RH
PQ27
N-AOL1718L_ULTRASO8-RH
PQ11
N-AOL1718L_ULTRASO8-RH
PR25
11.5KR1%0402
PR27
10KR1%0402
2010/6/29
Remove 1.5V Power Reduction
PR23,PQ8,PC25
PWR_SRC
PC31
C2200p50X0402
PC34
C0.1u25X0603
PC27
C10u25X51206
PC36
C10u25X51206
PC37
C10u25X51206
+1_5VDIMM
PCHOKE1
CH-1.5u33A4.2mS-RH
PR35
X_2.2R0603
PC39
X_C470p50X0402
PEC2
C330u2.5pSO
PEC1
C330u2.5pSO
MAX 23A
+1_5VDIMM
PQ14
N-AO4468_SOIC8-RH
28,35 RUND
PC41
C0.1u25Y0402-RH
+1_5VRUN
PQ12
N-AO4468_SOIC8-RH
+1_5VDIMM_1_ON
PC40
C0.1u25Y0402-RH
+1_5VDIMM_1
PWR_SRC
PR38
100KR0402
PWR_SRC
PR37
100KR0402
+1_5VDIMM_1_ON
PQ13
2N7002DW
PC38
C0.1U50Y
PR36
470KR0402
13,37,38 GPU_PWRGD
JNC30
X_0402
PR39
200KR0402
MAX 1A
+5VRUN
+1_5VDIMM
PU2
APL5331KAC-TRL_SOP8-RH
thermal pad(GND)
VIN
GND
VREF
VOUT
NC1
NC2
VCNTL
NC3
+5VSUS
PR94
10KR1%0402
PR15
1KR0402
PR19
1KR0402
PC20
C0.1u25Y
+0_75VRUN
PC21
C22u6.3X51206-RH-4
PC24
C22u6.3X51206-RH-4
3 +1_5VRUN_PWGD
R262
1KR0402
PQ25
NN-2N7002DW_SOT363-RH
PM_S3_CNTRL
Q2
N-BSS138_SOT23
+0_75VRUN
R263
22R0805
Q23
N-BSS138_SOT23
PWR_SRC
R264
100KR0402
N-2N7002_SOT23
PM_S3_CNTRL
Q1
18,26 PM_SLP_S3#
20101027 Change
R265
1MR0402
+1_5VRUN
R266
220R
Q24
N-BSS138_SOT23

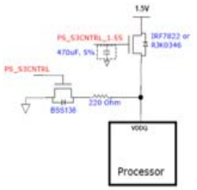
1.5V
PS_S3CNTRL_1.5S
470uF, 5%
IRF7822 or
RJK0346
PS_S3CNTRL
BSS138
220 Ohm
VDDQ
Processor

In current designs, Processor V_{DDQ} is powered with +V1.5, which is "ON" in S3. This is changed to a switching rail which is "OFF" during S3. A power FET is required to control the Processor V_{DDQ} (1.5 V) power. For N-FET (e.g., IRF7822 or RJK0346), gate voltage of FET (PS_S3CNTRL_1.5S) is derived from SLP_S3# and at 12-V logic. RDS(ON) of the FET used in CRB is in the range of 5 mΩ. Every design is different and designer should select an appropriate FET so that the required voltage rail specification is maintained at the Processor V_{DDQ} pins.

Signal Name	Source	Voltage Level	Comments
PS_S3CNTRL	Inverted SLP_S3# signal	In CRB, it is a 3.3-V signal.	Voltage should be high enough to turn ON or OFF the MOSFET. When selecting the MOSFET, insure $V_{gs}>V_{gsth}$.
PS_S3CNTRL_1.5S	Buffered SLP_S3# signal	In Intel CRB it is a 12-V signal.	Voltage should be high enough to turn ON or OFF the Power MOSFET. When selecting the MOSFET, insuree $V_{gs}>V_{gsth}$.

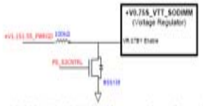
+V0.75S_VTT_SODIMM
(Voltage Regulator)
+V1.151.5S_PWRGD
100kΩ
VR ETBY Enable
PS_S3CNTRL
BSS138

+V0.75S_VTT_DIMM should ramp up later than +V1.5S_CPU_VDDQ. Circuit shown above is used to delay +V0.75V_VTT_SODIMM ramp with respect to +V1.5S_CPU_VDDQ.

100-kΩ isolation resistor is used in reference design so that when gate is turned on, it does not pull +V1.151.5S_PWRGD signal to low which may impact other functionality on the board. To ensure +V1.151.5S_PWRGD signal levels maintained, comparator pull-up has been changed from 100 kΩ to 1 kΩ (R2F2 in Intel CRB schematic).

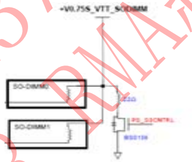
+V0.75S_VTT_SODIMM
SO-DIMM0
SO-DIMM1
22Ω
PS_S3CNTRL
BSS138

CKE is driven low by the processor to put the memory in self refresh while entering S3. When the processor +V1.5_CPU_VDDQ power is turned off, the discharge path on +V0.75S ensures CKE stays low during S3. To avoid any glitch on CKE signals during S3 entry, faster (22 Ω) discharge circuitry ensures +V0.75 ramps down before processor +V1.5S_CPU_VDDQ is turned off.

MSI CONFIDENTIAL 60013789 周小強 RD(C)20110516001 FOR RMA維修(劉松林) ONLY

MICRO-STAR INT'L CO.,LTD.
Title
SMDDR_VTERM/1_5VRUN
Size Custom
Document Number MS-1482
Rev 0A
Date: Friday, October 29, 2010
Sheet 36 of 44

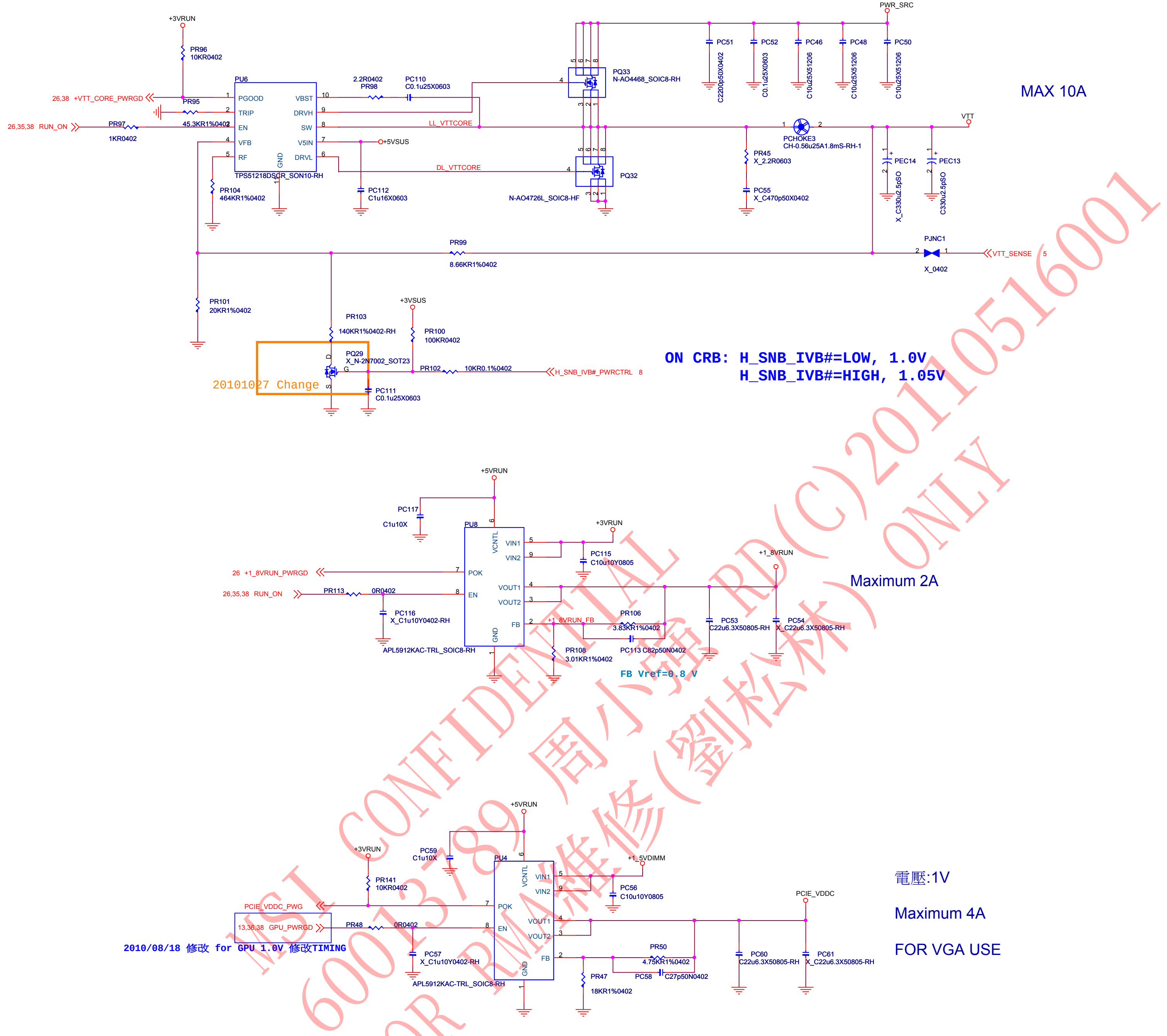
+3VRUN
PR96
10KR0402
PU6
26,38 +VTT_CORE_PWRGD
PR95
45.3KR1%0402
26,35,38 RUN_ON
PR97
1KR0402
PGOOD
TRIP
EN
VFB
RF
VBST
DRVH
SW
V5IN
DRVL
GND
TPS51218DSCR_SON10-RH
PR104
464KR1%0402
2.2R0402
PR98
PC110
C0.1u25X0603
LL_VTTCORE
DL_VTTCORE
+5VSUS
PC112
C1u16X0603
PQ33
N-AO4468_SOIC8-RH
PQ32
N-AO4726L_SOIC8-HF
PWR_SRC
PC51
C2200p50X0402
PC52
C0.1u25X0603
PC46
C10u25X51206
PC48
C10u25X51206
PC50
C10u25X51206
VTT
PCHOKE3
CH-0.56u25A1.8mS-RH-1
PR45
X_2.2R0603
PC55
X_C470p50X0402
PEC14
X_C330u2.5pSO
PEC13
C330u2.5pSO
PR99
8.66KR1%0402
PJNC1
X_0402
VTT_SENSE 5
PR101
20KR1%0402
PR103
140KR1%0402-RH
+3VSUS
PR100
100KR0402
PQ29
X_N-2N7002_SOT23
PR102
10KR0.1%0402
H_SNB_IVB#_PWRCTRL 8
PC111
C0.1u25X0603
+5VRUN
PC117
C1u10X
PU8
+3VRUN
VCNTL
VIN1
VIN2
PC115
C10u10Y0805
+1_8VRUN
26 +1_8VRUN_PWRGD
POK
EN
VOUT1
VOUT2
FB
GND
26,35,38 RUN_ON
PR113
0R0402
PC116
X_C1u10Y0402-RH
APL5912KAC-TRL_SOIC8-RH
+1_8VRUN_FB
PR106
3.83KR1%0402
PC113 C82p50N0402
PR108
3.01KR1%0402
PC53
C22u6.3X50805-RH
PC54
X_C22u6.3X50805-RH
+5VRUN
PC59
C1u10X
PU4
+3VRUN
PR141
10KR0402
+1_5VDIMM
PC56
C10u10Y0805
PCIE_VDDC_PWG
13,36,38 GPU_PWRGD
PR48
0R0402
PC57
X_C1u10Y0402-RH
APL5912KAC-TRL_SOIC8-RH
PCIE_VDDC
PR50
4.75KR1%0402
PC58
C27p50N0402
PR47
18KR1%0402
PC60
C22u6.3X50805-RH
PC61
X_C22u6.3X50805-RH

MAX 10A

20101027 Change

ON CRB: H_SNB_IVB#=LOW, 1.0V
H_SNB_IVB#=HIGH, 1.05V

Maximum 2A

FB Vref=0.8 V

電壓:1V

Maximum 4A

FOR VGA USE

2010/08/18 修改 for GPU 1.0V 修改TIMING

MSI CONFIDENTIAL 60013789 周小強 RD(C)20110516001 FOR RMA維修(劉松林) ONLY

MICRO-STAR INT'L CO.,LTD.

Title
VTT,+1.8VRUN,PCIE_VDDC

Size Custom
Document Number MS-1482
Rev 0A

Date: Friday, October 29, 2010
Sheet 37 of 44

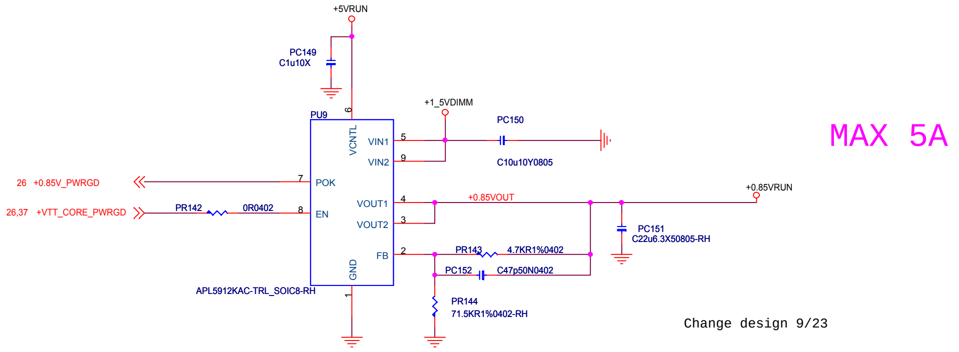
+5VRUN
PC149
C1u10X
PU9
6
VCNTL
+1_5VDIMM
PC150
5
VIN1
9
VIN2
C10u10Y0805
26 +0.85V_PWRGD
7
POK
+0.85VRUN
26,37 +VTT_CORE_PWRGD
PR142
0R0402
8
EN
4
VOUT1
+0.85VOUT
3
VOUT2
PC151
C22u6.3X50805-RH
2
FB
PR143
4.7KR1%0402
PC152
C47p50N0402
GND
1
APL5912KAC-TRL_SOIC8-RH
PR144
71.5KR1%0402-RH
MAX 5A
Change design 9/23

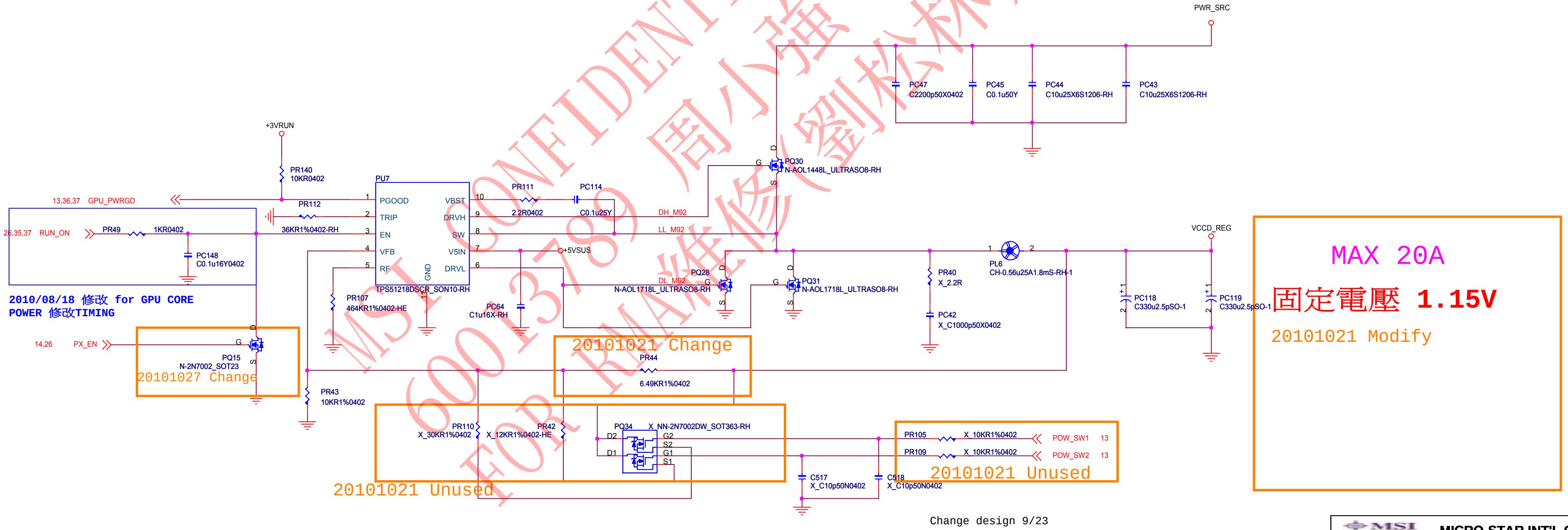
PWR_SRC
PC47
C2200p50X0402
PC45
C0.1u50Y
PC44
C10u25X6S1206-RH
PC43
C10u25X6S1206-RH
+3VRUN
PR140
10KR0402
PQ30
N-AOL1448L_ULTRASO8-RH
G
D
S
PU7
PR111
PC114
13,36,37 GPU_PWRGD
1
PGOOD
VBST
10
PR112
2
TRIP
DRVH
9
2.2R0402
C0.1u25Y
DH_M92
26,35,37 RUN_ON
PR49
1KR0402
36KR1%0402-RH
3
EN
SW
8
LL_M92
PC148
C0.1u16Y0402
4
VFB
V5IN
7
+5VSUS
VCCD_REG
5
RF
GND
DRVL
6
PQ28
DL_M92
N-AOL1718L_ULTRASO8-RH
PQ31
N-AOL1718L_ULTRASO8-RH
TPS51218DSCR_SON10-RH
11
PR107
464KR1%0402-HE
PC64
C1u16X-RH
1
2
PL6
CH-0.56u25A1.8mS-RH-1
PR40
X_2.2R
PC42
X_C1000p50X0402
PC118
C330u2.5pSO-1
PC119
C330u2.5pSO-1
2010/08/18 修改 for GPU CORE
POWER 修改TIMING
14,26 PX_EN
PQ15
N-2N7002_SOT23
20101027 Change
20101021 Change
PR44
6.49KR1%0402
PR43
10KR1%0402
PR110
X_30KR1%0402
PR42
X_12KR1%0402-HE
PQ34 X_NN-2N7002DW_SOT363-RH
D2
D1
G2
S2
G1
S1
PR105 X_10KR1%0402
POW_SW1 13
PR109 X_10KR1%0402
POW_SW2 13
C517
X_C10p50N0402
C518
X_C10p50N0402
20101021 Unused
20101021 Unused
Change design 9/23
MAX 20A
固定電壓 1.15V
20101021 Modify

MSI CONFIDENTIAL 60013789 周小強 RD(C)20110516001 FOR RMA維修(劉松林) ONLY

MICRO-STAR INT'L CO.,LTD.

Title
+0.85VRUN/VGA CORE

Size	Document Number	Rev
C	**MS-1482**	0A

Date: Friday, October 29, 2010 Sheet 38 of 44

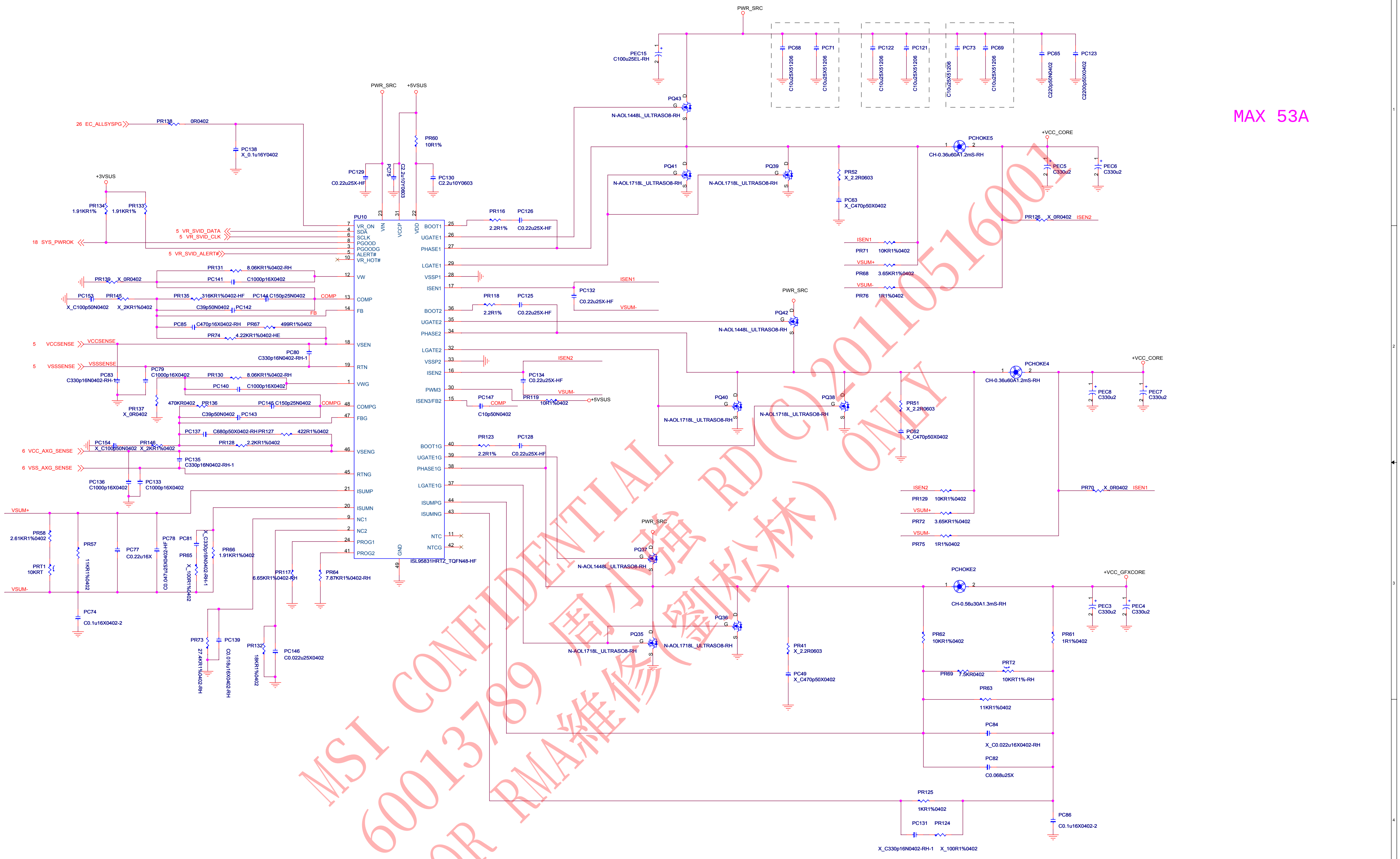
MAX 53A
PWR_SRC
PC15
C100u25EL-RH
PC68
PC71
PC122
PC121
PC73
PC69
PC65
PC123
C10u25X51206
C220p50N0402
C2200p50X0402
PQ43
N-AOL1448L_ULTRASO8-RH
PCHOKE5
CH-0.36u60A1.2mS-RH
+VCC_CORE
PEC5
C330u2
PEC6
PQ41
N-AOL1718L_ULTRASO8-RH
PQ39
PR52
X_2.2R0603
PC63
X_C470p50X0402
PR126
X_0R0402
ISEN2
ISEN1
PR71
10KR1%0402
VSUM+
PR68
3.65KR1%0402
VSUM-
PR76
1R1%0402
26 EC_ALLSYSPG
PR138
0R0402
PC138
X_0.1u16Y0402
+5VSUS
PR60
10R1%
PC129
C0.22u25X-HF
PC75
C2.2u10Y0603
PC130
C2.2u10Y0603
+3VSUS
PR134
1.91KR1%
PR133
1.91KR1%
5 VR_SVID_DATA
5 VR_SVID_CLK
18 SYS_PWROK
5 VR_SVID_ALERT#
PU10
VR_ON
SDA
SCLK
PGOOD
PGOODG
ALERT#
VR_HOT#
VIN
VCCP
VDD
BOOT1
UGATE1
PHASE1
LGATE1
VSSP1
ISEN1
BOOT2
UGATE2
PHASE2
LGATE2
VSSP2
ISEN2
PWM3
ISEN3/FB2
BOOT1G
UGATE1G
PHASE1G
LGATE1G
ISUMPG
ISUMNG
NTC
NTCG
GND
VW
COMP
FB
VSEN
RTN
VWG
COMPG
FBG
VSENG
RTNG
ISUMP
ISUMN
NC1
NC2
PROG1
PROG2
ISL95831HRTZ_TQFN48-HF
PR116
2.2R1%
PC126
C0.22u25X-HF
PR131
8.06KR1%0402-RH
PR139
X_0R0402
PC141
C1000p16X0402
PC153
X_C100p50N0402
PR145
X_2KR1%0402
PR135
316KR1%0402-HF
PC144
C150p25N0402
COMP
PC142
C39p50N0402
FB
PC85
C470p16X0402-RH
PR67
499R1%0402
PR74
4.22KR1%0402-HE
5 VCCSENSE
VCCSENSE
PC80
C330p16N0402-RH-1
5 VSSSENSE
VSSSENSE
PC83
C330p16N0402-RH-1
PC79
C1000p16X0402
PR130
8.06KR1%0402-RH
PC140
C1000p16X0402
PR137
X_0R0402
470KR0402
PR136
PC145
C150p25N0402
COMPG
PC143
C39p50N0402
PC137
C680p50X0402-RH
PR127
422R1%0402
PR128
2.2KR1%0402
PC154
X_C100p50N0402
PR146
X_2KR1%0402
6 VCC_AXG_SENSE
6 VSS_AXG_SENSE
PC135
C330p16N0402-RH-1
PC136
C1000p16X0402
PC133
C1000p16X0402
PR118
2.2R1%
PC125
C0.22u25X-HF
PC132
C0.22u25X-HF
PQ42
N-AOL1448L_ULTRASO8-RH
PC134
C0.22u25X-HF
PR119
10R1%0402
PC147
C10p50N0402
PCHOKE4
CH-0.36u60A1.2mS-RH
PEC8
PEC7
C330u2
PQ40
PQ38
PR51
X_2.2R0603
PC62
X_C470p50X0402
PR123
2.2R1%
PC128
C0.22u25X-HF
PR129
10KR1%0402
PR72
3.65KR1%0402
PR75
1R1%0402
PR70
X_0R0402
PR58
2.61KR1%0402
PR57
11KR1%0402
PRT1
10KRT
PC77
C0.22u16X
PC78
C0.047u25X0402-HF
PC81
X_C330p16N0402-RH-1
PR65
X_10R1%0402
PR66
1.91KR1%0402
PC74
C0.1u16X0402-2
PR117
6.65KR1%0402-RH
PR64
7.87KR1%0402-RH
PR73
27.4KR1%0402-RH
PC139
C0.018u16X0402-RH
PR132
18KR1%0402
PC146
C0.022u25X0402
PQ37
PQ36
PQ35
PCHOKE2
CH-0.56u30A1.3mS-RH
+VCC_GFXCORE
PEC3
PEC4
PR41
X_2.2R0603
PC49
X_C470p50X0402
PR62
10KR1%0402
PR61
1R1%0402
PRT2
10KRT1%-RH
PR69
7.5KR0402
PR63
11KR1%0402
PC84
X_C0.022u16X0402-RH
PC82
C0.068u25X
PR125
1KR1%0402
PC131
PR124
X_C330p16N0402-RH-1
X_100R1%0402
PC86
C0.1u16X0402-2

MICRO-STAR INT'L CO.,LTD.

Title
CPU CORE/GCORE

Size Custom
Document Number **MS-1482**
Rev 0A

Date: Friday, October 29, 2010
Sheet 39 of 44

MSI CONFIDENTIAL 60013789 周小莲 RD(C)2011051600 FOR RMA维修(刘松林) ONLY

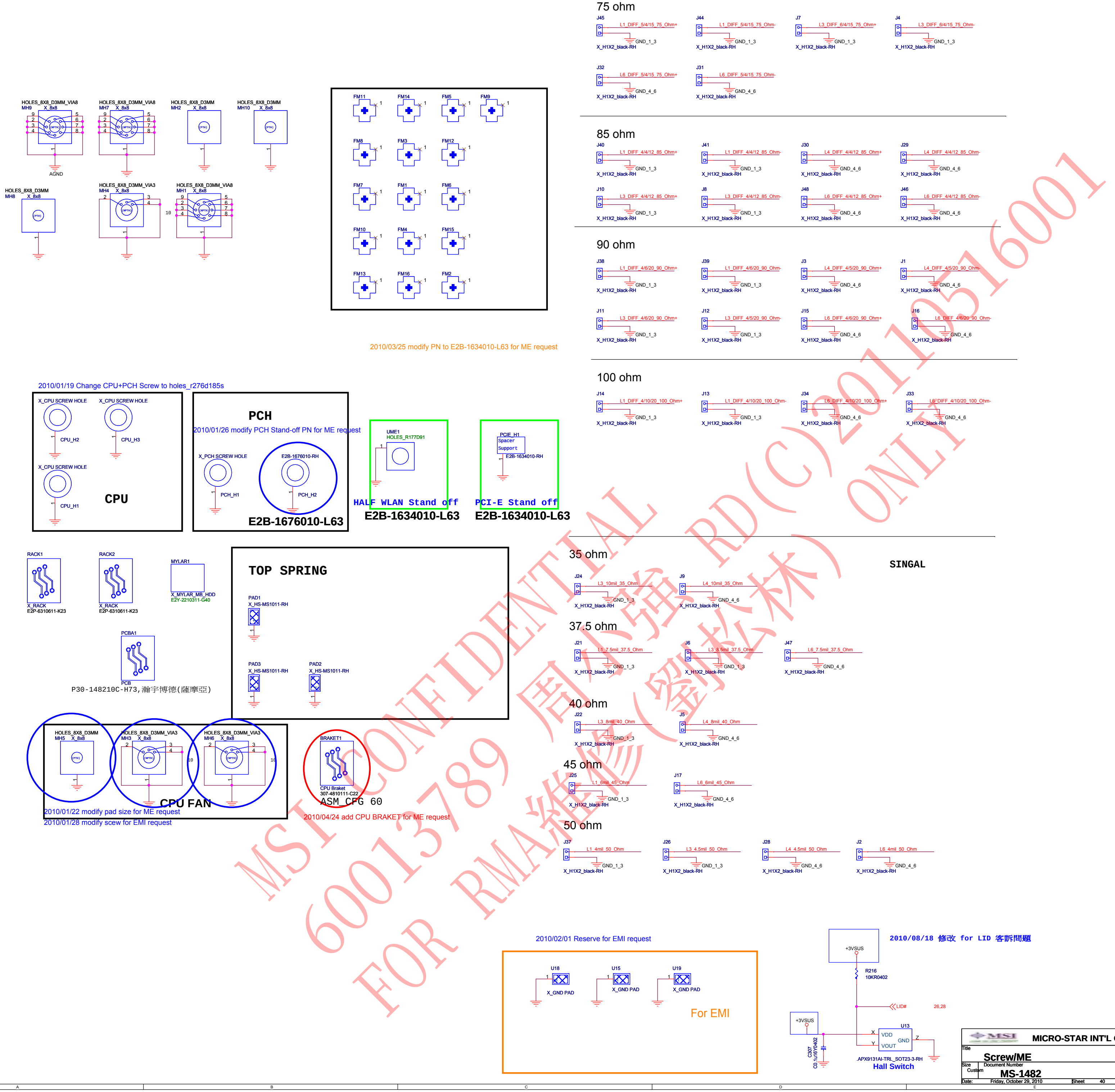

75 ohm
J45 L1_DIFF_5/4/15_75_Ohm+ GND_1_3 X_H1X2_black-RH
J44 L1_DIFF_5/4/15_75_Ohm- GND_1_3 X_H1X2_black-RH
J7 L3_DIFF_6/4/15_75_Ohm+ GND_1_3 X_H1X2_black-RH
J4 L3_DIFF_6/4/15_75_Ohm- GND_1_3 X_H1X2_black-RH
J32 L6_DIFF_5/4/15_75_Ohm+ GND_4_6 X_H1X2_black-RH
J31 L6_DIFF_5/4/15_75_Ohm- GND_4_6 X_H1X2_black-RH
85 ohm
J40 L1_DIFF_4/4/12_85_Ohm+ GND_1_3 X_H1X2_black-RH
J41 L1_DIFF_4/4/12_85_Ohm- GND_1_3 X_H1X2_black-RH
J30 L4_DIFF_4/4/12_85_Ohm+ GND_4_6 X_H1X2_black-RH
J29 L4_DIFF_4/4/12_85_Ohm- GND_4_6 X_H1X2_black-RH
J10 L3_DIFF_4/4/12_85_Ohm+ GND_1_3 X_H1X2_black-RH
J8 L3_DIFF_4/4/12_85_Ohm- GND_1_3 X_H1X2_black-RH
J48 L6_DIFF_4/4/12_85_Ohm+ GND_4_6 X_H1X2_black-RH
J46 L6_DIFF_4/4/12_85_Ohm- GND_4_6 X_H1X2_black-RH
90 ohm
J38 L1_DIFF_4/6/20_90_Ohm+ GND_1_3 X_H1X2_black-RH
J39 L1_DIFF_4/6/20_90_Ohm- GND_1_3 X_H1X2_black-RH
J3 L4_DIFF_4/5/20_90_Ohm+ GND_4_6 X_H1X2_black-RH
J1 L4_DIFF_4/5/20_90_Ohm- GND_4_6 X_H1X2_black-RH
J11 L3_DIFF_4/6/20_90_Ohm+ GND_1_3 X_H1X2_black-RH
J12 L3_DIFF_4/5/20_90_Ohm- GND_1_3 X_H1X2_black-RH
J15 L6_DIFF_4/6/20_90_Ohm+ GND_4_6 X_H1X2_black-RH
J16 L6_DIFF_4/6/20_90_Ohm- GND_4_6 X_H1X2_black-RH
100 ohm
J14 L1_DIFF_4/10/20_100_Ohm+ GND_1_3 X_H1X2_black-RH
J13 L1_DIFF_4/10/20_100_Ohm- GND_1_3 X_H1X2_black-RH
J34 L6_DIFF_4/10/20_100_Ohm+ GND_4_6 X_H1X2_black-RH
J33 L6_DIFF_4/10/20_100_Ohm- GND_4_6 X_H1X2_black-RH
35 ohm
J24 L3_10mil_35_Ohm GND_1_3 X_H1X2_black-RH
J9 L4_10mil_35_Ohm GND_4_6 X_H1X2_black-RH
SINGAL
37.5 ohm
J21 L1_7.5mil_37.5_Ohm GND_1_3 X_H1X2_black-RH
J6 L3_8.5mil_37.5_Ohm GND_1_3 X_H1X2_black-RH
J47 L6_7.5mil_37.5_Ohm GND_4_6 X_H1X2_black-RH
40 ohm
J22 L3_8mil_40_Ohm GND_1_3 X_H1X2_black-RH
J5 L4_8mil_40_Ohm GND_4_6 X_H1X2_black-RH
45 ohm
J25 L1_6mil_45_Ohm GND_1_3 X_H1X2_black-RH
J17 L6_6mil_45_Ohm GND_4_6 X_H1X2_black-RH
50 ohm
J37 L1_4mil_50_Ohm GND_1_3 X_H1X2_black-RH
J26 L3_4.5mil_50_Ohm GND_1_3 X_H1X2_black-RH
J28 L4_4.5mil_50_Ohm GND_4_6 X_H1X2_black-RH
J2 L6_4mil_50_Ohm GND_4_6 X_H1X2_black-RH
HOLES_8X8_D3MM_VIA8 MH9 X_8x8
HOLES_8X8_D3MM_VIA8 MH7 X_8x8
HOLES_8X8_D3MM MH2 X_8x8
HOLES_8X8_D3MM MH10 X_8x8
AGND
HOLES_8X8_D3MM MH8 X_8x8
HOLES_8X8_D3MM_VIA3 MH4 X_8x8
HOLES_8X8_D3MM_VIA8 MH1 X_8x8
FM11 FM14 FM5 FM9
FM8 FM3 FM12
FM7 FM1 FM6
FM10 FM4 FM15
FM13 FM16 FM2
X_CPU SCREW HOLE CPU_H2
X_CPU SCREW HOLE CPU_H3
X_CPU SCREW HOLE CPU_H1
CPU
PCH
X_PCH SCREW HOLE PCH_H1
E2B-1676010-RH PCH_H2
E2B-1676010-L63
UME1 HOLES_R177D91
HALF WLAN Stand off
E2B-1634010-L63
PCIE_H1 Spacer Support E2B-1634010-RH
PCI-E Stand off
E2B-1634010-L63
RACK1 X_RACK E2P-6310611-K23
RACK2 X_RACK E2P-6310611-K23
MYLAR1 X_MYLAR_MB_HDD E2Y-2210311-G40
PCBA1 PCB
P30-148210C-H73,瀚宇博德(薩摩亞)
TOP SPRING
PAD1 X_HS-MS1011-RH
PAD3 X_HS-MS1011-RH
PAD2 X_HS-MS1011-RH
HOLES_8X8_D3MM MH5 X_8x8
HOLES_8X8_D3MM_VIA3 MH3 X_8x8
HOLES_8X8_D3MM_VIA3 MH6 X_8x8
CPU FAN
BRAKET1 CPU Braket 307-4810111-C22
ASM_CFG 60
U18 X_GND PAD
U15 X_GND PAD
U19 X_GND PAD
For EMI
+3VSUS
R216 10KR0402
LID# 26,28
+3VSUS
U13 VDD GND VOUT
C307 C0.1u16Y0402
APX9131AI-TRL_SOT23-3-RH
Hall Switch

2010/03/25 modify PN to E2B-1634010-L63 for ME request

2010/01/19 Change CPU+PCH Screw to holes_r276d185s

2010/01/26 modify PCH Stand-off PN for ME request

2010/01/22 modify pad size for ME request

2010/01/28 modify scew for EMI request

2010/04/24 add CPU BRAKET for ME request

2010/02/01 Reserve for EMI request

2010/08/18 修改 for LID 客訴問題

MSI CONFIDENTIAL
60013789 周小強 RD(C)20110516001
FOR RMA維修(劉松林) ONLY

MICRO-STAR INT'L CO.,LTD.

Title	Screw/ME	
Size Custom	Document Number MS-1482	Rev 0A
Date: Friday, October 29, 2010	Sheet 40 of 44	

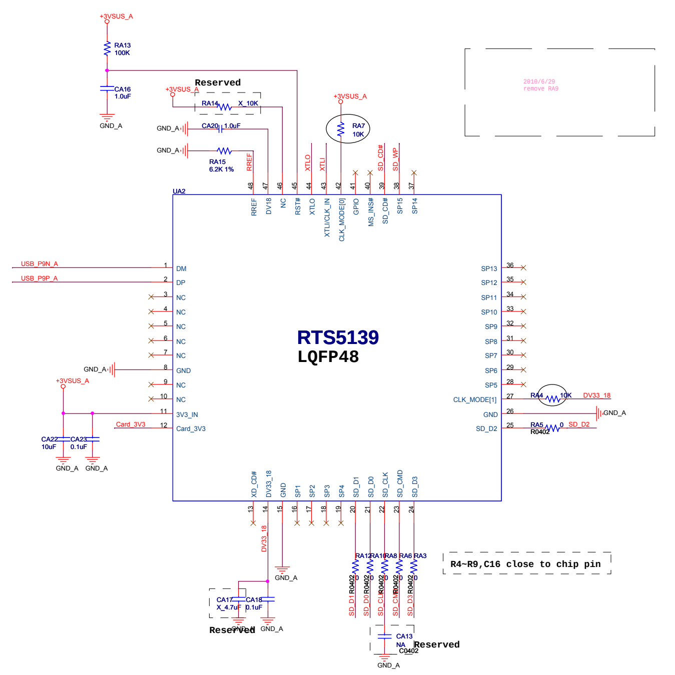
RTS5139
LQFP48
UA2
+3VSUS_A
RA13 100K
CA16 1.0uF
Reserved
RA14 X_10K
CA20 1.0uF
RA15 6.2K 1%
RA7 10K
USB_P9N_A
USB_P9P_A
Card_3V3
CA22 10uF
CA23 0.1uF
RA4 10K
DV33_18
RA5 0
SD_D2
CA17 X_4.7uF
CA18 0.1uF
CA13 NA C0402
Reserved
R4~R9,C16 close to chip pin
2010/6/29 remove RA9
GND_A

2010/01/22 modify pad size

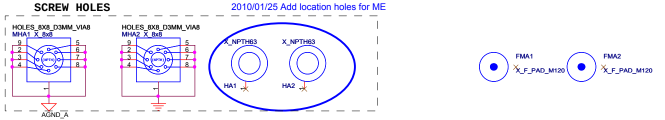
SCREW HOLES
2010/01/25 Add location holes for ME
HOLES_8X8_D3MM_VIA8
MHA1 X_8x8
MHA2 X_8x8
X_NPTH63
HA1
HA2
FMA1 X_F_PAD_M120
FMA2 X_F_PAD_M120
AGND_A

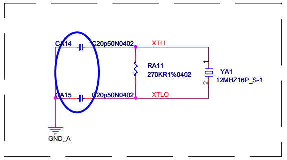
CA14 20p50N0402
CA15 20p50N0402
XTLI
XTLO
RA11 270KR1%0402
YA1 12MHZ16P_S-1
GND_A

Clock	R23	R22
48MHz	×	×
24MHz	×	○
12MHz	○	○
12MHz (Crystal)	○	○

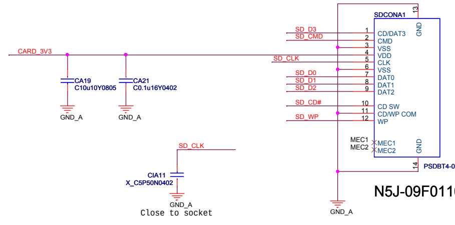
CARD_3V3
CA19 C10u10Y0805
CA21 C0.1u16Y0402
SDCONA1
CD/DAT3
CMD
VSS
VDD
CLK
DAT0
DAT1
DAT2
CD SW
CD/WP COM
WP
MEC1
MEC2
PSDBT4-09GLAG1N14N1
SD_CLK
CIA11 X_C5P50N0402
Close to socket
N5J-09F0110-N40
GND_A

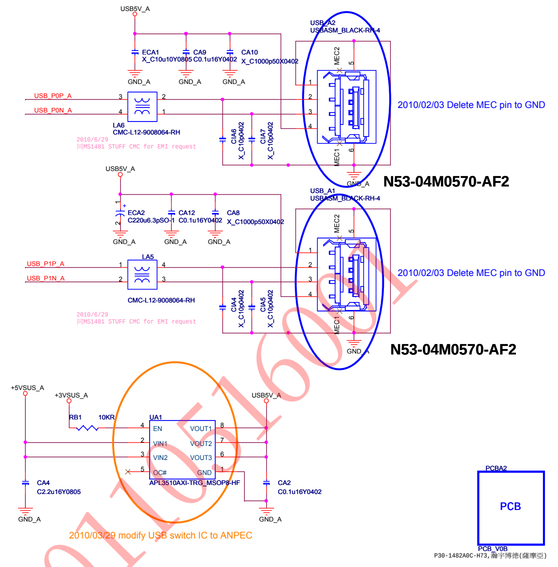
USB5V_A
ECA1 X_C10u10Y0805
CA9 C0.1u16Y0402
CA10 X_C1000p50X0402
USB_A2 USBASM_BLACK-RH-4
USB_P0P_A
USB_P0N_A
LA6 CMC-L12-9008064-RH
2010/6/29 MS1481 STUFF CMC for EMI request
2010/02/03 Delete MEC pin to GND
N53-04M0570-AF2
ECA2 C220u6.3pSO-1
CA12 C0.1u16Y0402
CA8 X_C1000p50X0402
USB_A1 USBASM_BLACK-RH-4
USB_P1P_A
USB_P1N_A
LA5 CMC-L12-9008064-RH
2010/02/03 Delete MEC pin to GND
N53-04M0570-AF2
+5VSUS_A
+3VSUS_A
RB1 10KR
UA1
EN
VIN1
VIN2
OC#
VOUT1
VOUT2
VOUT3
GND
APL3510AXI-TRG_MSOP8-HF
CA4 C2.2u16Y0805
CA2 C0.1u16Y0402
2010/03/29 modify USB switch IC to ANPEC
PCBA2
PCB
PCB_V0B
P30-1482A0C-H73,雁宇博德(蘇華亞)
GND_A

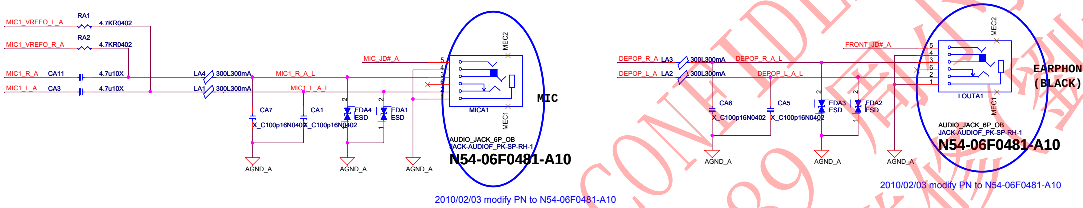
MIC1_VREFO_L_A
MIC1_VREFO_R_A
RA1 4.7KR0402
RA2 4.7KR0402
MIC1_R_A
MIC1_L_A
CA11 4.7u10X
CA3 4.7u10X
LA4 300L300mA
LA1 300L300mA
CA7 X_C100p16N0402
CA1 X_C100p16N0402
EDA4 ESD
EDA1 ESD
MIC_JD#_A
MICA1
MIC
AUDIO_JACK_6P_OB
JACK-AUDIOF_PK-SP-RH-1
N54-06F0481-A10
2010/02/03 modify PN to N54-06F0481-A10
DEPOP_R_A
DEPOP_L_A
LA3 300L300mA
LA2 300L300mA
CA6 X_C100p16N0402
CA5 X_C100p16N0402
EDA3 ESD
EDA2 ESD
FRONT_JD#_A
LOUTA1
EARPHONE (BLACK)
AUDIO_JACK_6P_OB
JACK-AUDIOF_PK-SP-RH-1
N54-06F0481-A10
2010/02/03 modify PN to N54-06F0481-A10
AGND_A

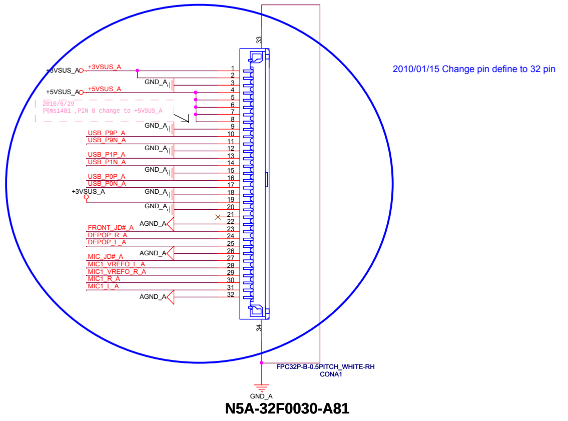
2010/01/15 Change pin define to 32 pin
+3VSUS_A
+5VSUS_A
2010/6/29 MS1481 PIN 6 change to +5VSUS_A
USB_P9P_A
USB_P9N_A
USB_P1P_A
USB_P1N_A
USB_P0P_A
USB_P0N_A
FRONT_JD#_A
DEPOP_R_A
DEPOP_L_A
MIC_JD#_A
MIC1_VREFO_L_A
MIC1_VREFO_R_A
MIC1_R_A
MIC1_L_A
GND_A
AGND_A
FPC32P-B-0.5PITCH_WHITE-RH
CONA1
N5A-32F0030-A81

2010/02/01 Reserve for EMI

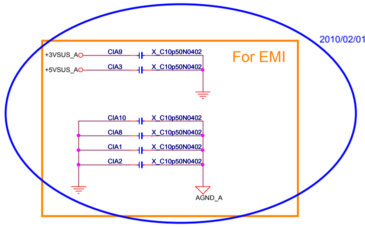
For EMI
+3VSUS_A
+5VSUS_A
CIA9 X_C10p50N0402
CIA3 X_C10p50N0402
CIA10 X_C10p50N0402
CIA8 X_C10p50N0402
CIA1 X_C10p50N0402
CIA2 X_C10p50N0402
AGND_A

MSI CONFIDENTIAL
60013789 周小强 RD(C)2010/5/16 0:01
FOR RMA维修（刘松林）ONLY

MICRO-STAR INT'L CO.,LTD.

Title
Card reader,Audio,USB Connector

Size: Custom
Document Number: MS-1481
Rev: 0B

Date: Friday, October 29, 2010
Sheet 41 of 44

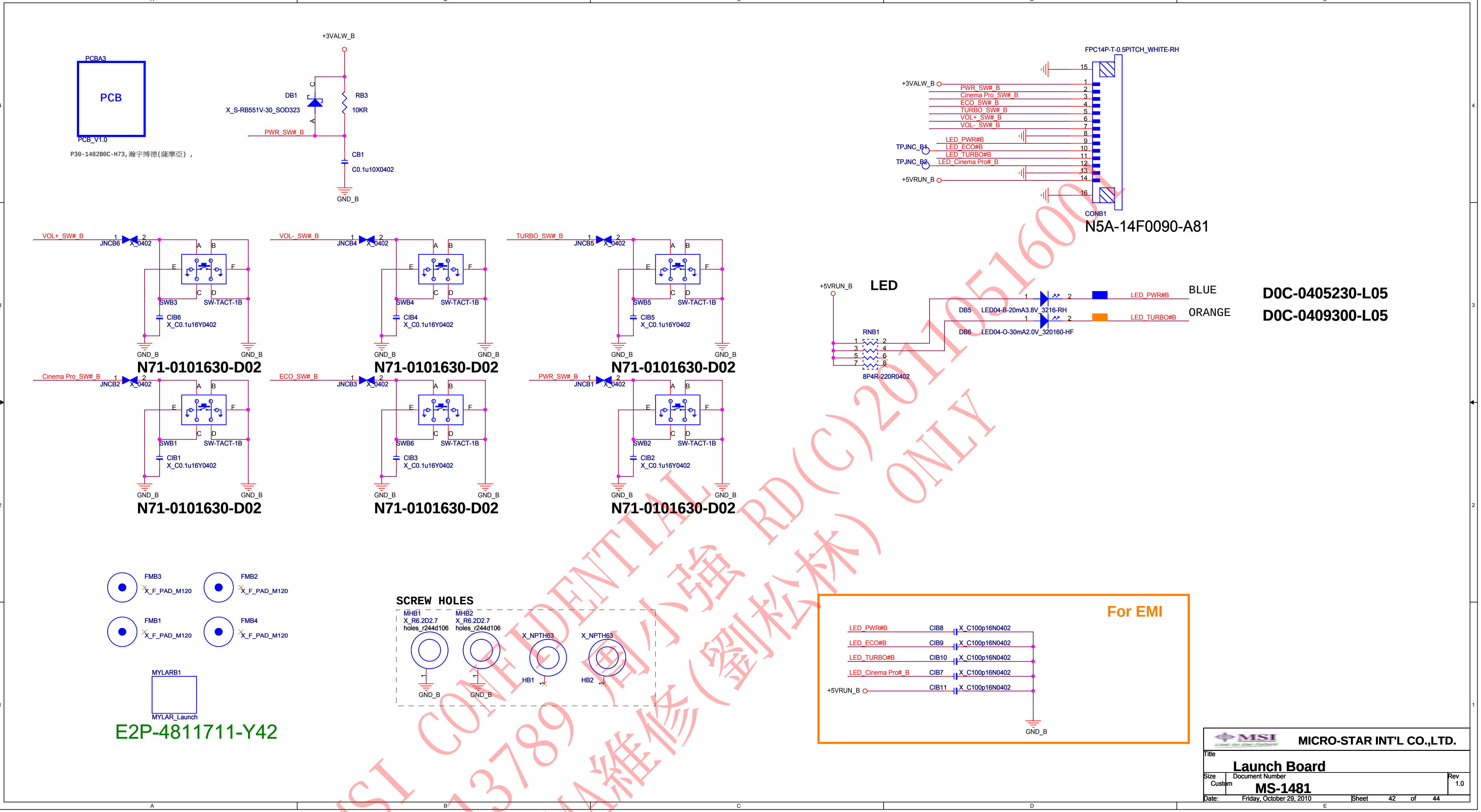
PCBA3
PCB
PCB_V1.0
P30-1482B0C-H73,瀚宇博德(薩摩亞) ,
+3VALW_B
DB1
X_S-RB551V-30_SOD323
RB3
10KR
PWR_SW#_B
CB1
C0.1u10X0402
GND_B
FPC14P-T-0.5PITCH_WHITE-RH
+3VALW_B
PWR_SW#_B
Cinema Pro_SW#_B
ECO_SW#_B
TURBO_SW#_B
VOL+_SW#_B
VOL-_SW#_B
LED_PWR#B
LED_ECO#B
LED_TURBO#B
LED_Cinema Pro#_B
TPJNC_B1
TPJNC_B2
+5VRUN_B
CONB1
N5A-14F0090-A81
VOL+_SW#_B
JNCB6
X_0402
SWB3
SW-TACT-1B
CIB6
X_C0.1u16Y0402
N71-0101630-D02
VOL-_SW#_B
JNCB4
SWB4
CIB4
N71-0101630-D02
TURBO_SW#_B
JNCB5
SWB5
CIB5
N71-0101630-D02
Cinema Pro_SW#_B
JNCB2
SWB1
CIB1
N71-0101630-D02
ECO_SW#_B
JNCB3
SWB6
CIB3
N71-0101630-D02
PWR_SW#_B
JNCB1
SWB2
CIB2
N71-0101630-D02
LED
+5VRUN_B
DB5
LED04-B-20mA3.8V_3216-RH
DB6
LED04-O-30mA2.0V_320160-HF
LED_PWR#B
LED_TURBO#B
BLUE
ORANGE
D0C-0405230-L05
D0C-0409300-L05
RNB1
8P4R-220R0402
FMB3
FMB2
FMB1
FMB4
X_F_PAD_M120
SCREW HOLES
MHB1
MHB2
X_R6.2D2.7
holes_r244d106
X_NPTH63
HB1
HB2
MYLARB1
MYLAR_Launch
E2P-4811711-Y42
For EMI
LED_PWR#B
LED_ECO#B
LED_TURBO#B
LED_Cinema Pro#_B
+5VRUN_B
CIB8
CIB9
CIB10
CIB7
CIB11
X_C100p16N0402
GND_B

MSI CONFIDENTIAL RD(C)2010516001
600013789 周小強
FOR RMA維修(劉松林) ONLY

MICRO-STAR INT'L CO.,LTD.

Title
Launch Board

Size	Document Number	Rev
Custom	**MS-1481**	1.0

Date: Friday, October 29, 2010 Sheet 42 of 44

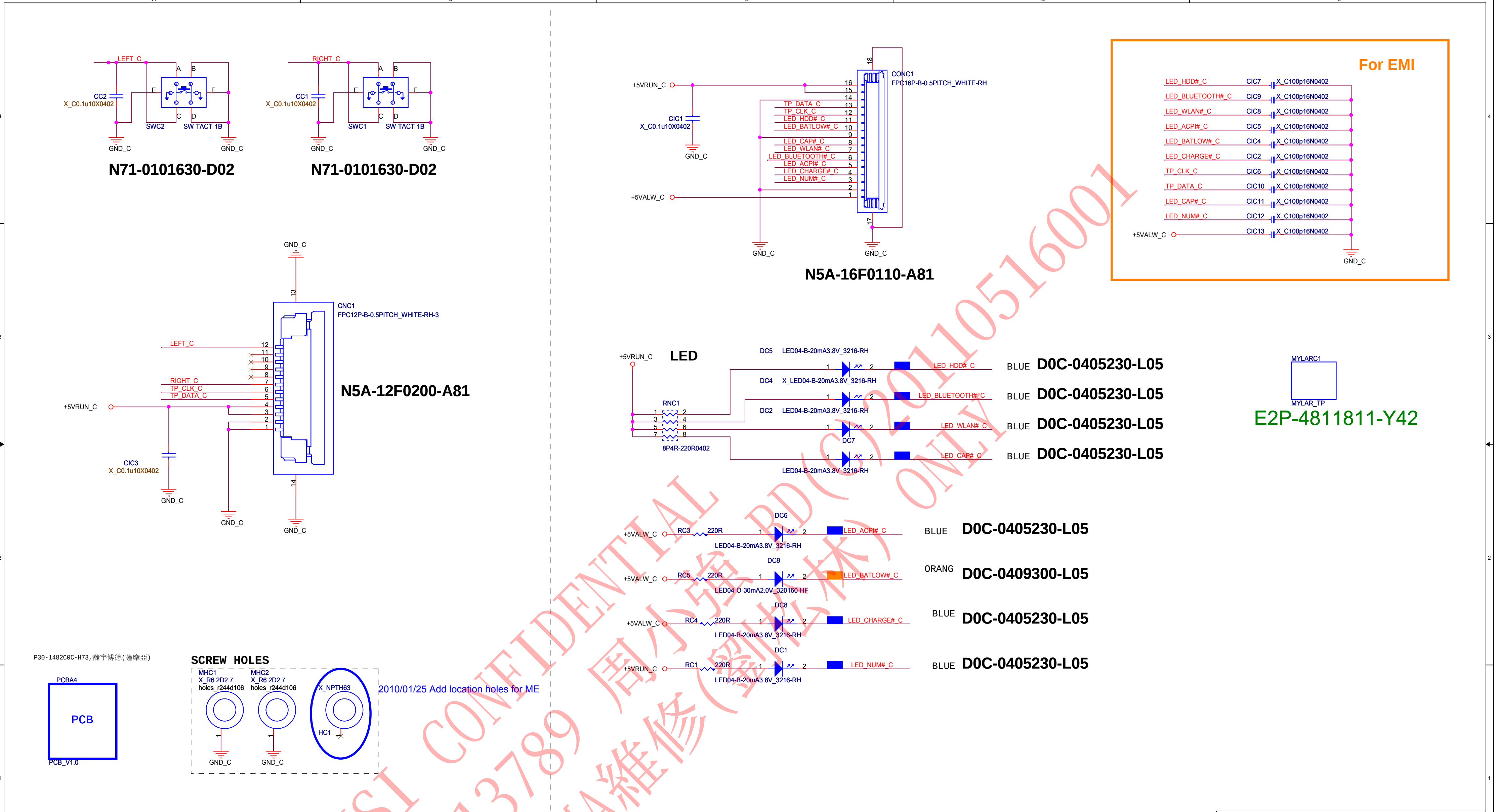
LEFT_C
CC2
X_C0.1u10X0402
SWC2
SW-TACT-1B
GND_C
N71-0101630-D02
RIGHT_C
CC1
X_C0.1u10X0402
SWC1
SW-TACT-1B
N71-0101630-D02
+5VRUN_C
CIC1
X_C0.1u10X0402
CONC1
FPC16P-B-0.5PITCH_WHITE-RH
TP_DATA_C
TP_CLK_C
LED_HDD#_C
LED_BATLOW#_C
LED_CAP#_C
LED_WLAN#_C
LED_BLUETOOTH#_C
LED_ACPI#_C
LED_CHARGE#_C
LED_NUM#_C
+5VALW_C
N5A-16F0110-A81
For EMI
CIC7 X_C100p16N0402
CIC9 X_C100p16N0402
CIC8 X_C100p16N0402
CIC5 X_C100p16N0402
CIC4 X_C100p16N0402
CIC2 X_C100p16N0402
CIC6 X_C100p16N0402
CIC10 X_C100p16N0402
CIC11 X_C100p16N0402
CIC12 X_C100p16N0402
CIC13 X_C100p16N0402
CNC1
FPC12P-B-0.5PITCH_WHITE-RH-3
N5A-12F0200-A81
CIC3
X_C0.1u10X0402
LED
DC5 LED04-B-20mA3.8V_3216-RH
DC4 X_LED04-B-20mA3.8V_3216-RH
DC2 LED04-B-20mA3.8V_3216-RH
DC7
LED04-B-20mA3.8V_3216-RH
RNC1
8P4R-220R0402
BLUE D0C-0405230-L05
BLUE D0C-0405230-L05
BLUE D0C-0405230-L05
BLUE D0C-0405230-L05
MYLARC1
MYLAR_TP
E2P-4811811-Y42
DC6
RC3 220R
LED04-B-20mA3.8V_3216-RH
BLUE D0C-0405230-L05
DC9
RC5 220R
LED04-O-30mA2.0V_320160-HF
ORANG D0C-0409300-L05
DC8
RC4 220R
LED04-B-20mA3.8V_3216-RH
BLUE D0C-0405230-L05
DC1
RC1 220R
LED04-B-20mA3.8V_3216-RH
BLUE D0C-0405230-L05
P30-1482C0C-H73,瀚宇博德(薩摩亞)
PCBA4
PCB
PCB_V1.0
SCREW HOLES
MHC1 X_R6.2D2.7 holes_r244d106
MHC2 X_R6.2D2.7 holes_r244d106
X_NPTH63
HC1
2010/01/25 Add location holes for ME

MSI CONFIDENTIAL 60013789 周小兵 RD(C)20110516001 FOR RMA維修(劉彬林) ONLY

MICRO-STAR INT'L CO.,LTD.

Title
TP,LEDBOARD

Size: Custom
Document Number: **MS-1481**
Rev: 1.0

Date: Friday, October 29, 2010
Sheet 43 of 44

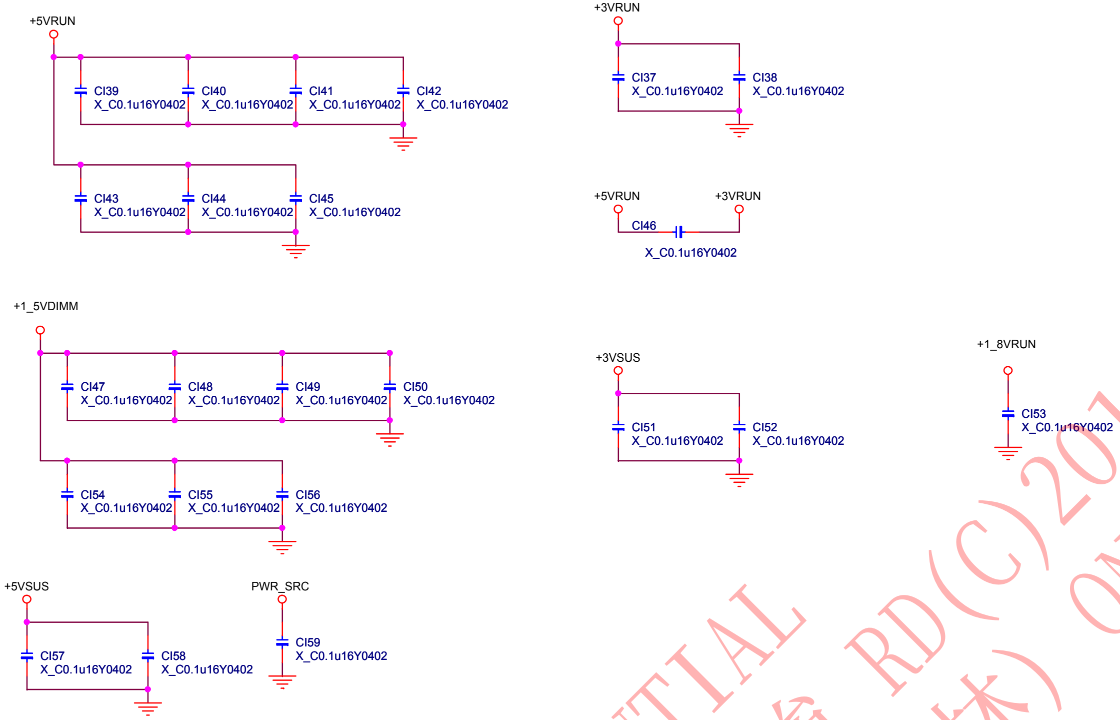
+5VRUN
CI39
X_C0.1u16Y0402
CI40
X_C0.1u16Y0402
CI41
X_C0.1u16Y0402
CI42
X_C0.1u16Y0402
CI43
X_C0.1u16Y0402
CI44
X_C0.1u16Y0402
CI45
X_C0.1u16Y0402
+3VRUN
CI37
X_C0.1u16Y0402
CI38
X_C0.1u16Y0402
+5VRUN
+3VRUN
CI46
X_C0.1u16Y0402
+1_5VDIMM
CI47
X_C0.1u16Y0402
CI48
X_C0.1u16Y0402
CI49
X_C0.1u16Y0402
CI50
X_C0.1u16Y0402
CI54
X_C0.1u16Y0402
CI55
X_C0.1u16Y0402
CI56
X_C0.1u16Y0402
+3VSUS
CI51
X_C0.1u16Y0402
CI52
X_C0.1u16Y0402
+1_8VRUN
CI53
X_C0.1u16Y0402
+5VSUS
CI57
X_C0.1u16Y0402
CI58
X_C0.1u16Y0402
PWR_SRC
CI59
X_C0.1u16Y0402

MSI CONFIDENTIAL
60013789 周小強 RD(C)20110516001
FOR RMA維修(劉松林) ONLY

Title <Title>		
Size A3	Document Number <Doc>	Rev <RevCode>
Date: Friday, October 29, 2010	Sheet 44 of 44	